S98-CRB
v1.1
S98-CRB 9-port switch with buffer power supply for 8 IP cameras and recorder, with recorder space

Edition: 3 from 15.11.2017
Supercedes the edition: 2 from 09.01.2017

EN**

Features:

- Uninterruptible power supply of 8 IP cameras (48V DC)
- uninterruptible power supply of the recorder (12V DC)
- 9 10/100 Mb/s ports
- 8 PoE ports (data transfer and power supply)
- 15,4W for each PoE port, supports devices complaint with the IEEE802.3af standard
- Approximate backup time: 3h 45min
- Metal housing - color white RAL 9003, which can accommodate 2 x 17Ah/12V batteries and offers the possibility of recorder installation
- Supports auto-learning and auto-aging of MAC addresses (1K size)
- Space for a recorder with the following max. dimensions max. 380x320x65 (WxHxD)
- warranty – 2 year from the production date

Example of use.

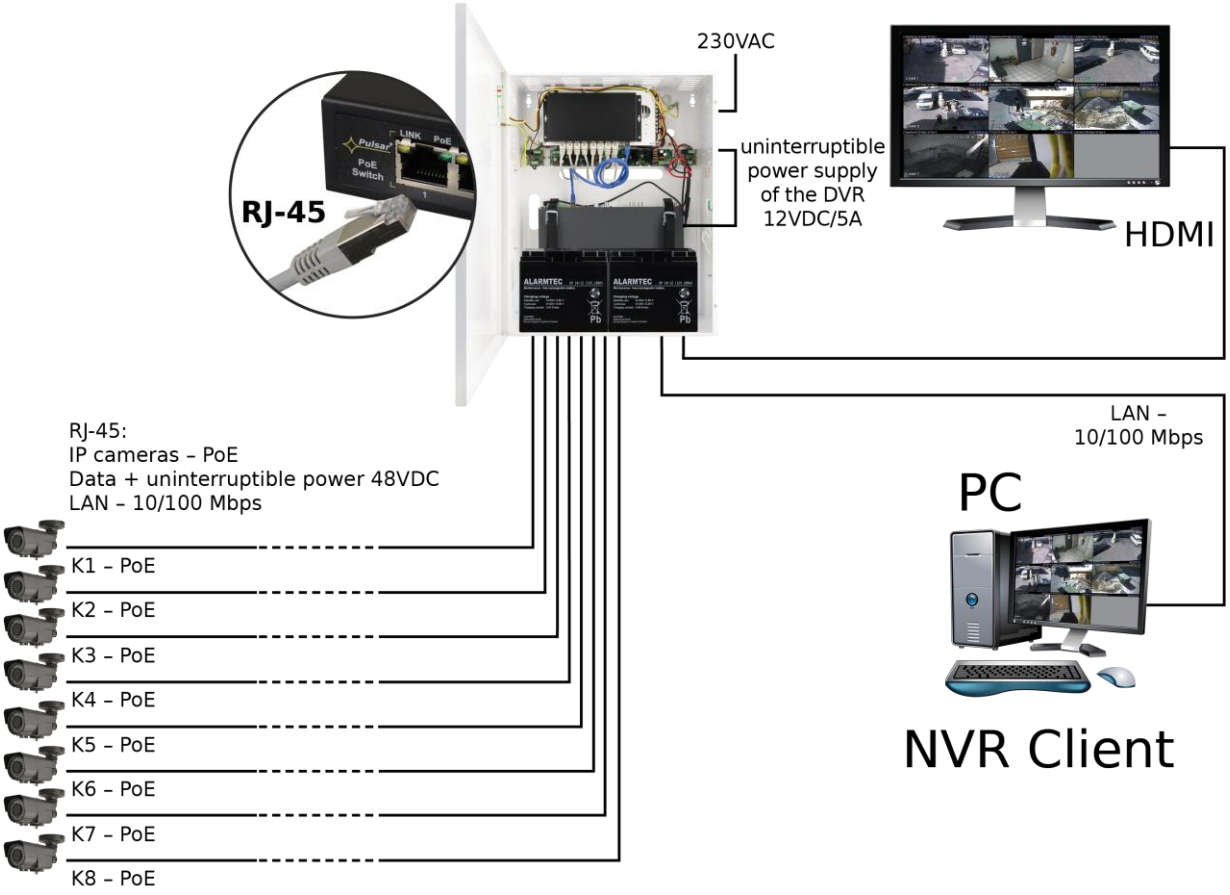

CONTENTS

1. Technical description.
- **1.1 General description**
- **1.2 Block diagram**
- **1.3 Description of components and connectors**
- **1.4 Technical parameters**

2. Installation.
- **2.1 Requirements**
- **2.2 Installation procedure**

3. Indication of the device operation
- **3.1 LED indication of operating status**
- **3.2 Optical indication of the switch operation**

4. Operation and use.
- **4.1 Overload or short circuit of the PSU output (SCP on)**
- **4.2 Disconnection of discharged battery**
- **4.3 Maintenance**

1. Technical description

1.1. General description.

The S98-CRB is a complete solution for uninterruptible power supply of 8 IP cameras (48V DC power supply) and uninterruptible power supply of the DVR (12V DC power supply). In addition, the large size of the enclosure allows installing the recorder inside.

The main elements of this system include:
- 9 port PoE switch
- buffer power supply unit 27,6V which can accommodate two 2 x 17Ah/12V batteries
- a converter (DC/DC48250) increasing the voltage to 48VDC (supply of the PoE switch)
- 12V DC (DC/DC50SD) buck converter (DVR power supply)

In case of power decay, a battery back-up is activated immediately.

The approximate backup time is given assuming that all output ports are used (using typical devices and 17Ah batteries). The electricity consumption for own needs and the energy efficiency of the power intake track were taken into account. The exact description of how to perform the calculations can be found at: "Approximate backup time - assumptions for calculations".

Automatic detection of any devices powered in the PoE standard is enabled at the 1 – 8 ports of the switch. The UPLINK port is used for connection of another network device e.g. recorder. The LEDs at the front panel indicate the operation status (description in the table. 8).

The switch is housed in a metal enclosure (color RAL 9003) which can accommodate two 2x17Ah/12V battery. The enclosure features a micro switch tamper indicating door opening (front panel). The S98-CRB is fitted with two LEDs on the front panel (red LED – indicates 230V AC power supply of the PSU, green LED indicates the presence of DC voltage).

The PoE technology ensures a network connection and reduces installation costs by eliminating the need to supply a separate power cable for each device. This method allows supplying other network devices, such as IP phone, wireless access point or router.

1.2 Block diagram.

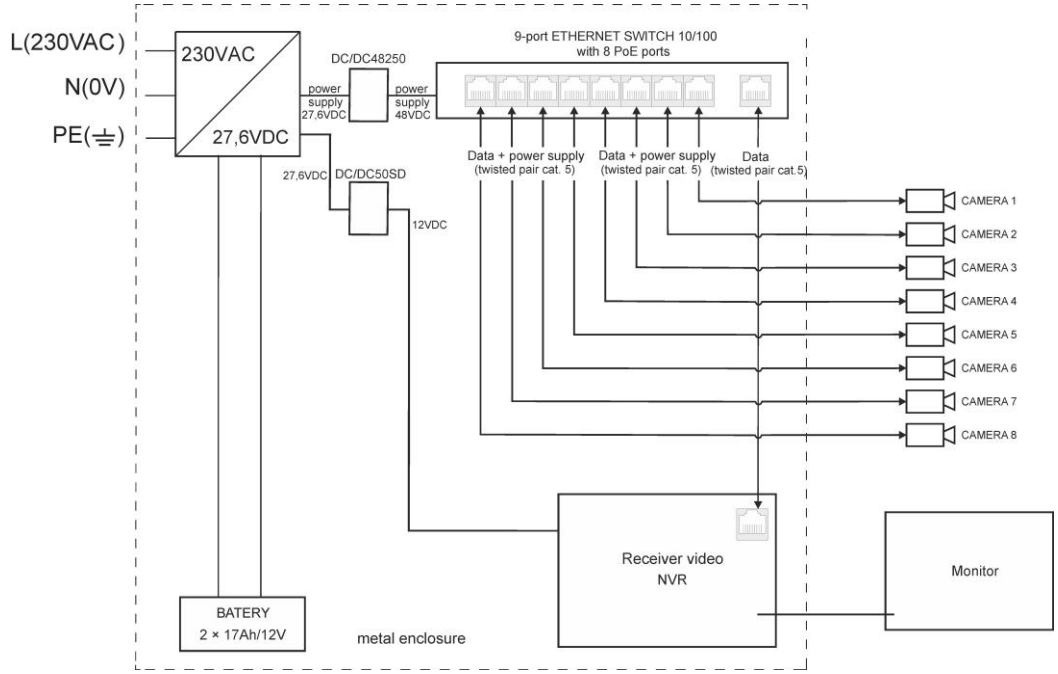

Fig. 1. Block diagram.

1.3 Description of components and connectors.

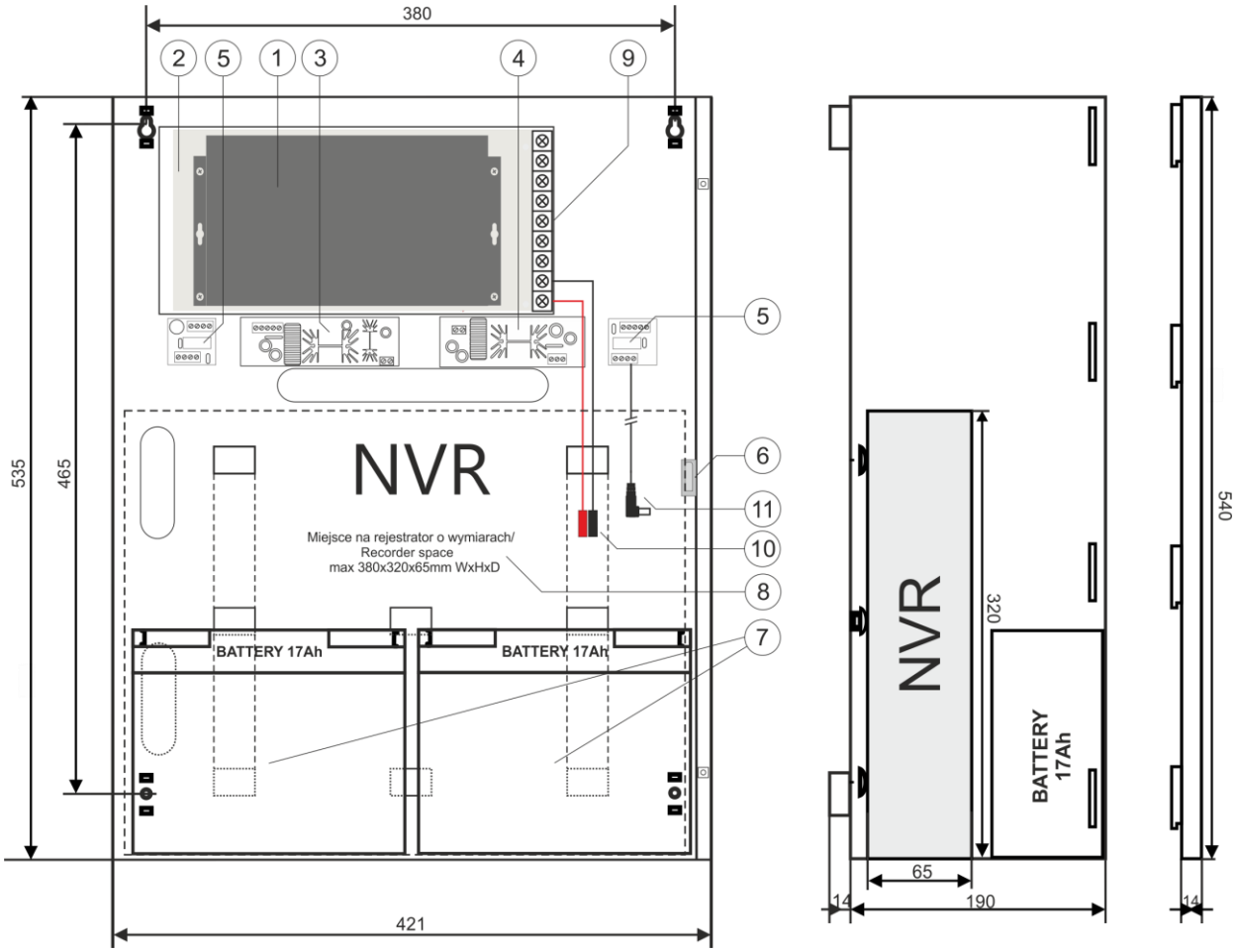

Fig. 2. The enclosure view.

Table 1. (See Fig. 2)

Component No. (Fig. 2)	Description
[1]	Switch PoE
[2]	Switch mode buffer power supply unit
[3]	DC/DC48250 converter
[4]	DC/DC50SD converter
[5]	Output filter
[6]	Tamper – micro switch (terminals) of tamper protection (NC)
[7]	Space for batteries (2x17Ah/12V – connect the batteries in series)
[8]	Recorder space 380x320x65 (WxHxD)
[9]	Power supply connector of the PSU – L, N PE protective connector (electric shock)
[10]	BAT +, BAT - battery output + BAT red, - BAT black
[11]	DVR power cord terminated with the DC 2.1/5.5 plug

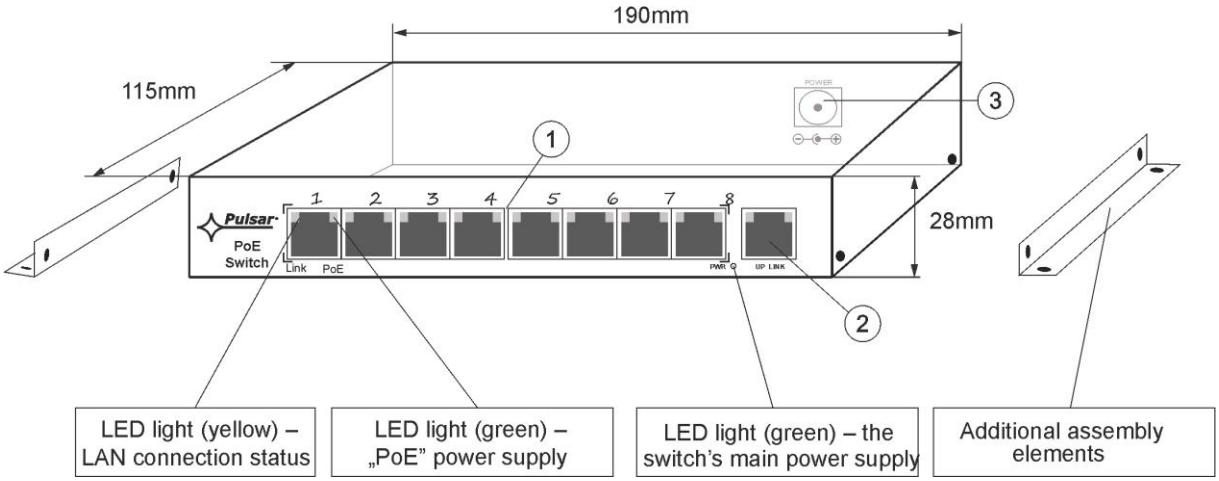

Fig. 3. The view of the switch.

Table 2. (See Fig.3)

Component No (Fig. 3)	Description
[1]	8 x PoE port (1÷8)
[2]	1 x UPLINK port
[3]	48V DC power supply socket

1.4 Technical parameters

- parameters of the switch (tab.3)
- electrical parameters (tab.4)
- mechanical parameters (tab.5)
- operation safety (tab.6)
- operating parameters (tab.7)

Table 3. Parameters of the switch

Ports	9 10/100 Mb/s ports (8 x PoE + 1 x UPLINK) with connection speed auto-negotiation and MDI/MDIX Auto Cross)
PoE power supply	IEEE 802.3af (1÷8 ports), 48V DC / 15,4W at each port * Used pairs 4/5 (+), 7/8 (-)
Protocols, Standards	IEEE802.3, 802.3u, 802.3x CSMA/CD, TCP/IP
Forwarding rate	10BASE-T: 14880pps/port
	100BASE-TX: 148800pps/port
Bandwidth	1,6 Gbps
Transmission method	Store-and-Forward
Optical indication of operation	Switch power supply; Link/Act; PoE Status

***** The given value of 15,4W per port is the maximum value. The total power consumption should not exceed 96W when all PoE ports are being used.

Table 4. Electrical parameters

Mains supply	176÷264V AC
Current up to	1,4A@230V AC max.
Supply power	184W
Output current at the PoE ports (RJ45)	8 x 0,3A ΣI=2A (max.)
Output voltage at the PoE ports (RJ45)	48V DC
Output current (recorder)	5A
Output voltage (recorder)	12V DC
Short-circuit protection SCP and overload protection OLP	105% ÷ 150% PSU power, manual restart (the fault requires disconnection of the DC output circuit)
PSU current consumption	100mA / 27,6V
Battery charge current	1,0A max. / 2x17Ah (+/-5%)
Approximate backup time	3h 45min
Battery circuit protection SCP and reverse polarity connection	melting fuse
Deep discharge battery protection UVP	U<19V (± 5%) – disconnect of connection battery
Sabotage protection: **- TAMPER output indicating enclosure opening**	- microswitch, NC contacts (enclosure closed), 0,5A@50V DC (max.)

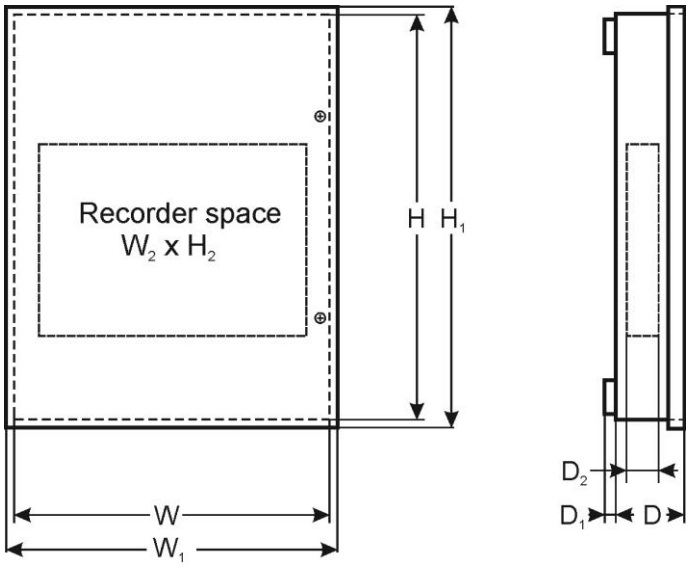

Table 5. Mechanical parameters

Dimensions	W=421, H=535, D+D_1=193+14 [+/- 2mm] W_1=426, H_1=540 [+/- 2mm]
The dimensions of the recorder compartment	W_2=380, H_2=320, D_2=65 [+/- 2mm]
The dimensions of the battery compartment	370x180x80 (WxHxD)
Gross/Net weight	11 / 11,5 kg
Enclosure	Steel plate, DC01 1,0mm color white RAL 9003
Closing	Cheese head screw x 2 (at the front), (lock assembly possible)
Connectors	Power supply of the cameras: RJ45 socket Power supply: for recorder: DC2,1/5,5 plug Input 230V AC: Φ 0,63-2,50 (AWG 22-10) Outputs: Φ 0,63-2,50 (AWG 22-10), battery output BAT: 6,3F-2,5 TAMPER output: wires
Notes	The enclosure does not touch the assembly surface so that cables can be led.

Table 6. Operation safety

Protection class PN-EN 609501:2007	I (first)
Protection grade PN-EN 60529: 2002 (U)	IP20
Electrical strength of insulation: **- between input and output circuits of the PSU (I/P-O/P)** **- between input circuit and PE protection circuit (I/P-FG)** **- between output circuit and PE protection circuit (O/P-FG)**	 3000 V/AC min. 1500 V/AC min. 500 V/AC min.
Insulation resistance: **- between input circuit and output or protection circuit**	 100 MΩ, 500V/DC
Declarations	CE

Table 7. Operating parameters

Operating temperature	-10ºC...+40ºC
Storage temperature	-20ºC...+60ºC
Relative humidity	20%...90%, without condensation
Vibrations during operation	unacceptable
Impulse waves during operation	unacceptable
Direct insulation	unacceptable
Vibrations and impulse waves during transport	According to PN-83/T-42106

2. Installation

2.1. Installation procedure

The device should be mounted by a qualified installer, holding relevant permits and licenses (applicable and required for a given country) for 230V AC and low-voltage installations.

The device shall be mounted in confined spaces, according to the environment class II, with normal air humidity (RH=90% max. without condensation) and the temperature from -10°C to +40°C.

The switch shall work in a vertical position that guarantees sufficient convectional air-flow through ventilating holes of the enclosure.

Before installation, prepare a Switch'a load balance.

The given value of 15,4W per port is the maximum value referring to a single output. The total power consumption should not exceed 96W when all PoE ports are being used. The increased demand for power is particularly evident in the case of cameras with heaters or infrared illuminators - when launching these features, the power consumption increases rapidly, which may adversely affect the operation of the switch. As the device is designed for a continuous operation and is not equipped with a power-switch, therefore an appropriate overload protection shall be guaranteed in the power supply circuit. Moreover, the user shall be informed about the method of unplugging (usually through assigning an appropriate fuse in the fuse-box). The electrical system shall follow valid standards and regulations.

2.2. Installation procedure

1. Before installation, cut off the voltage in the 230V power-supply circuit.
2. Mount the PSU in a selected location and connect the wires.
3. Connect the power cables (~230V AC) to L-N clips of the PSU.

The shock protection circuit shall be performed with a particular care, i.e. the yellow and green wire coat of the power cable shall stick to one side of the terminal - marked with '⏚' symbol on the PSU enclosure. Operation of the PSU without the properly made and fully operational shock protection circuit is UNACCEPTABLE! It can cause a device failure or an electric shock.

4. Connect the ground wire to the terminal marked with the ⏚ symbol (power supply module connector). Connect the ground wire to the clip marked by the earth symbol PE. Use a three-core cable (with a yellow and green PE protection wire) to make the connection. Lead the cables to the appropriate clips through the insulating bushing of the connection board.

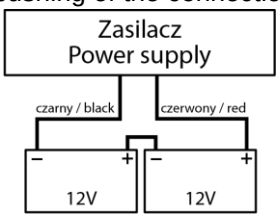

5. Connect the battery by fig:
   - battery output (+V): BAT+ cable / red,
   - battery output (0V): BAT – cable / GND / black.

6. Connect the power (~230V).
7. Connect the camera cables to the RJ45 connectors (PoE connectors) and connect the recorder to the network (the UPLINK connector).
8. Connect the power supply of the DVR (by default, the device is equipped with a cable terminated with the DC 2.1 / 5.5 plug)
9. Check the optical indication of the switch operation.
10. After installing and checking proper working, the enclosure can be closed.

3. Indication of the device operation.

3.1 LED indication of operating status.

The PSU is equipped with two diodes on the front panel:

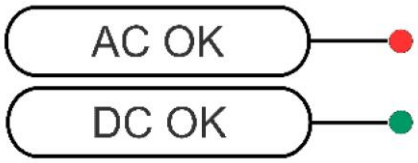

RED LED:
- on – the PSU is supplied with 230V AC
- off – no 230V AC supply

GREEN LED:
- on – DC voltage in the AUX output of the PSU
- off – no DC voltage in the AUX output of the PSU

3.2 Optical indication of the switch operation (see Table 8).

Table 8. Indication of the switch operation

OPTICAL INDICATION OF THE SWITCH's POWER SUPPLY

GREEN LED LIGHT (Power) Indication of the switch's power supply **PWR**	**OFF** – no power supply of the switch **ON** – power supply on, normal operation

OPTICAL INDICATION OF THE SWITCH's POWER SUPPLY (1÷8)

GREEN LED LIGHT (PoE) Indication of the PoE power supply at the RJ45 ports	**OFF**- no power supply at the RJ45 port (the device is not connected or not compliant with the IEEE802.3af standard) **ON** – supply at the RJ45 port **Blinking** – short-circuit or output overload
YELLOW LED LIGHT (LINK) The connection status of LAN devices, 10 Mb/s or 100 Mb/s and data transmission	**OFF**- no connection **ON** - the device is connected; 10 Mb/s or 100 Mb/s **Blinking** – data transmission

OPTICAL INDICATION AT THE UPLINK PORT

GREEN LED LIGHT	**OFF**- no connection **ON** – the device is connected; 10 Mb/s or 100 Mb/s
YELLOW LED LIGHT (LINK) The connection status of LAN devices, 10 Mb/s or 100 Mb/s and data transmission	**OFF**- no data transmission **ON** - the device is connected: 10 Mb/s or 100 Mb/s **Blinking** – data transmission

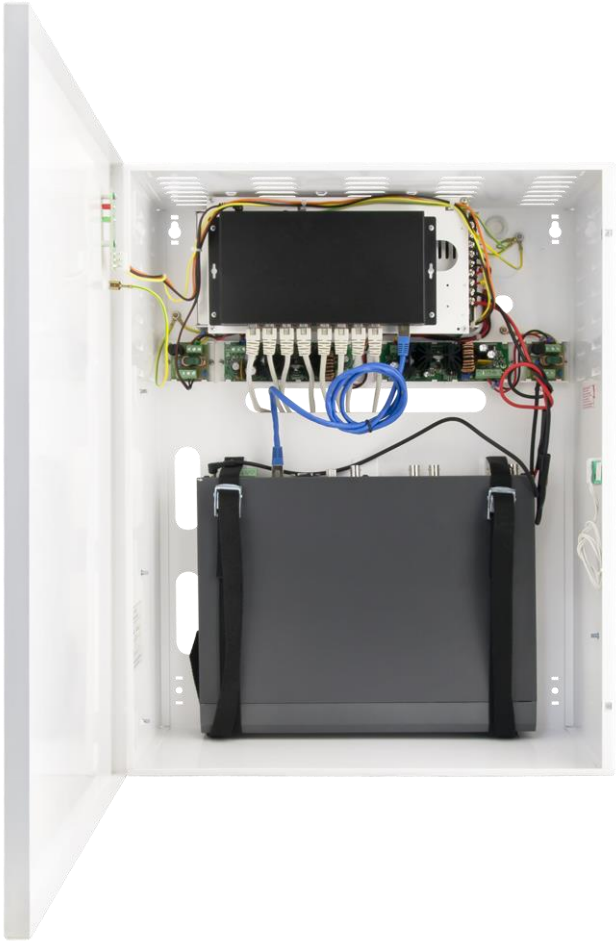

Installation example of the S98-CRB with batteries and the recorder
(DVR and accumulators are not included)

4. Operation and use.

4.1 Overload or short circuit of the PSU output (SCP on).

In case of overload, the output voltage is automatically shut off, and so is the LED indicator. The restoration of the voltage takes place immediately after the failure (overload) is over.

4.2 Disconnection of discharged battery.

The PSU is equipped with the discharged battery disconnection system. During the battery-assisted operation, reducing voltage below 19V at the battery terminals will cause battery disconnection.

4.3 Maintenance.

Any and all maintenance operations may be performed following the disconnection of the PSU from the power supply network. The PSU does not require performing any specific maintenance measures, however, in case of significant dust rate, its interior is recommended to be cleaned with compressed air. In case of fuse replacement, use a replacement of the same parameters.

WEEE LABEL

Waste electrical and electronic equipment must not be disposed of with normal household waste. According to the European Union WEEE Directive, waste electrical and electronic equipment should be disposed of separately from normal household waste.

The power supply unit is adapted for a sealed lead-acid battery (SLA). After the operation period it must not be disposed of but recycled according to the applicable law.

Pulsar
Siedlec 150, 32-744 Łapczyca, Poland
Tel. (+48) 14-610-19-40, Fax. (+48) 14-610-19-50
e-mail: biuro@pulsar.pl, sales@pulsar.pl
http:// www.pulsar.pl, www.zasilacze.pl