PSUPS10A12C

v.1.0

PSUPS 13,8V/12V/10A/17Ah

Buffer power supply for 8 HD cameras and recorder

EN

Edition: 3 from 07.09.2018

Supercedes the edition: 2 from 15.11.2017

GREEN POWER CCTV

Features:

- DC 13,8V uninterruptible power supply of HD cameras
- DC 12V uninterruptible power supply of the recorder
- fitting battery 17Ah/12V
- wide range of mains supply AC 176÷264V
- high efficiency 80%
- 8 outputs protected by 1A glass fuses for powering HD cameras
- 12V/4A output dedicated to supply the recorder
- battery charge and maintenance control
- battery charging current: 1A
- Approximate backup time: 1h 30min
- deep discharge battery protection (UVP)
- battery output protection against short circuit and reverse polarity connection
- LED indication
- protections:
  - SCP short-circuit protection
  - OLP overload protection
  - OVP over voltage protection
  - surge protection
  - against sabotage
- warranty – 2 years from the production date

An example of power supply for cameras.

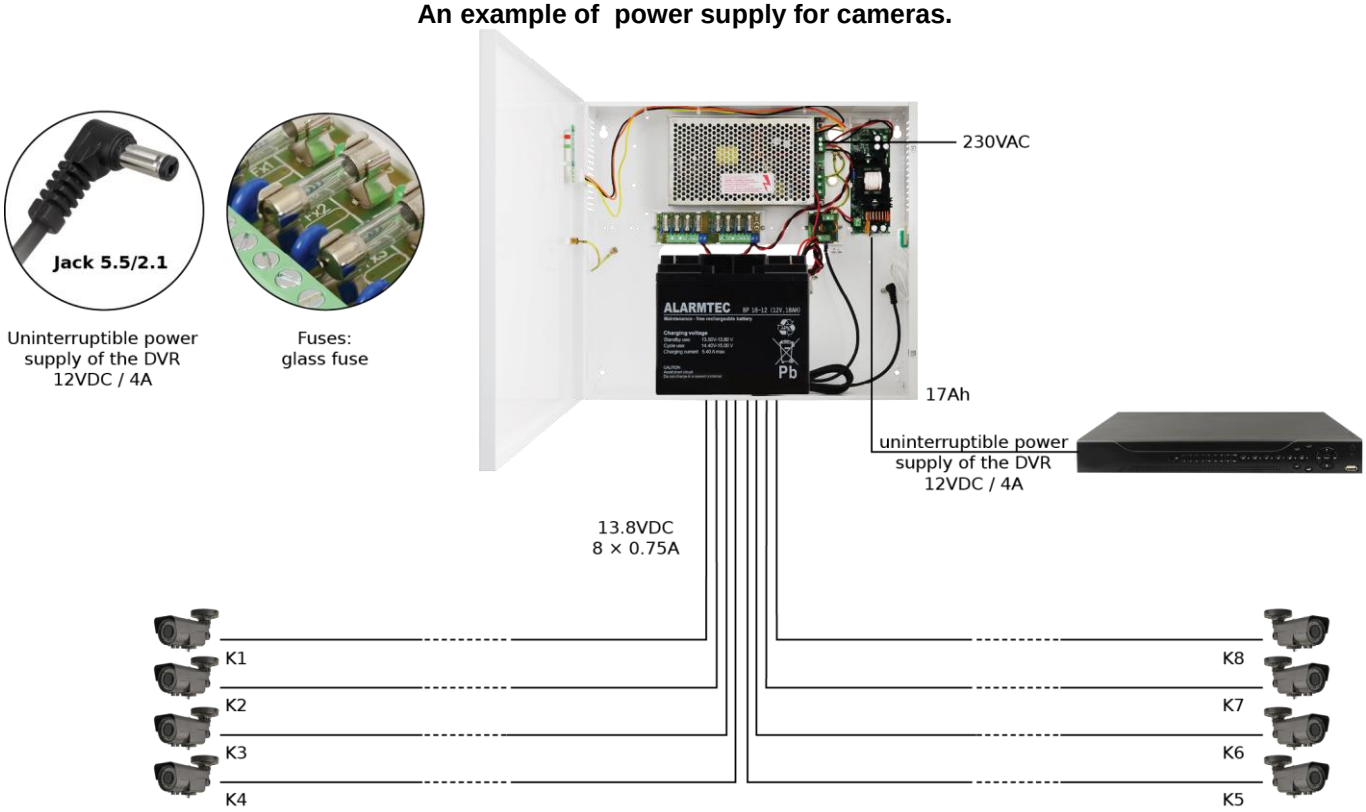

CONTENTS:

1. Technical description.

1.1. General description.

A buffer PSU is intended for an uninterrupted supply to CCTV system devices requiring stabilized voltage of **12V DC (+/-15%)**. The PSU has two circuits: first **1x4A/12VDC** for supplying the recorder and **8x0,75A/13,8V DC** for both cameras. Current efficiency of the PSU amounts to:

Output current 8x0,75A + 4A recorder + 1A battery charging*
Total current of the receivers + battery 11A* max.

In case of 230V mains power loss, a battery back-up is activated immediately.

The approximate backup time is given assuming that all output ports are used (using typical devices and 17Ah batteria). The electricity consumption for own needs and the energy efficiency of the power intake track were taken into account. The exact description of how to perform the calculations can be found at: "Approximate backup time - assumptions for calculations".

The PSU is mounted in a metal enclosure (RAL 9003 colour) that accommodates a 17Ah/12V battery. The enclosure is equipped with a micro-switch indicating unwanted opening of the door (faceplate).

1.2. Block diagram (fig.1).

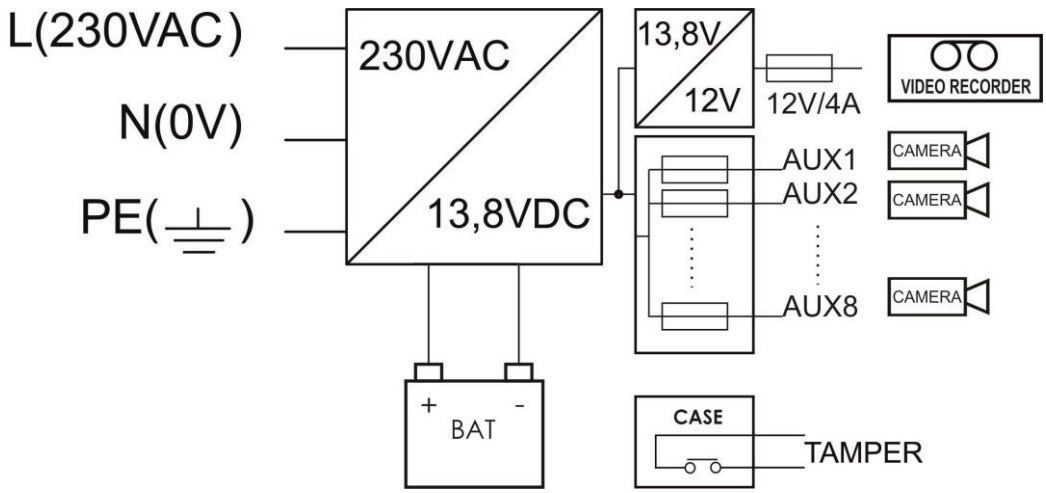

Fig.1. Block diagram of the PSU.

1.3. Description of PSU components.

Table 1. Description of components and connectors module LB8.

Component no. [Fig. 2]	Description
1	**F1÷F8** glass fuses
2	**L1÷L8** LED voltage indication at the outputs
3	**AUX1 ÷ AUX8** independently protected outputs **IN1-, IN2-** power supply inputs of the fuse module

Table 2. Description of components and connectors output filter.

Component no. [Fig. 3]	Description
1	**F_{AUX}** glass fuses
2	⏚ PE protection connector
3	**AUX – output** **IN –** power supply inputs, output filter

* See chart 1

The power supply enclosure houses fuse modules for powering 8 cameras.

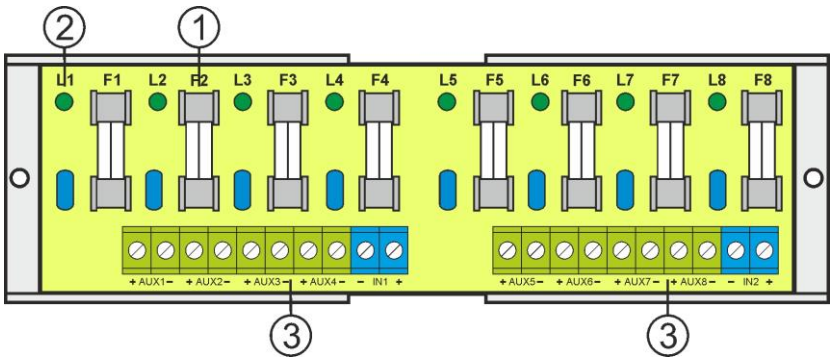

Fig.2. The view of the fuse module LB8.

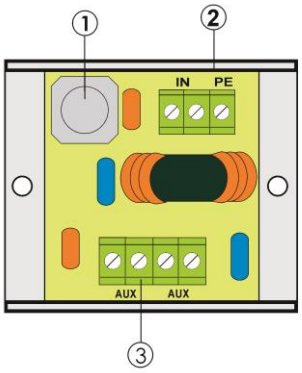

Fig.3. Output filter.

Table 3. Description of the module's components and connectors.

Component no. [Fig. 4]	Description
1	**PSU module PSB-15512110**
2	**Connectors of the PSU:** **L-N** 230V AC power connector, PE protection connector **V+, V-** DC supply outputs
3	**green LED** indicates DC power
4	**P1 potentiometer,** output voltage adjustment
5	Battery outputs: red: +, black: -
6	**TAMPER,** contact of tamper protection **(NC)**
7	Fuse module LB8
8	DC/DC 50SE-SEP converter
9	Output filter

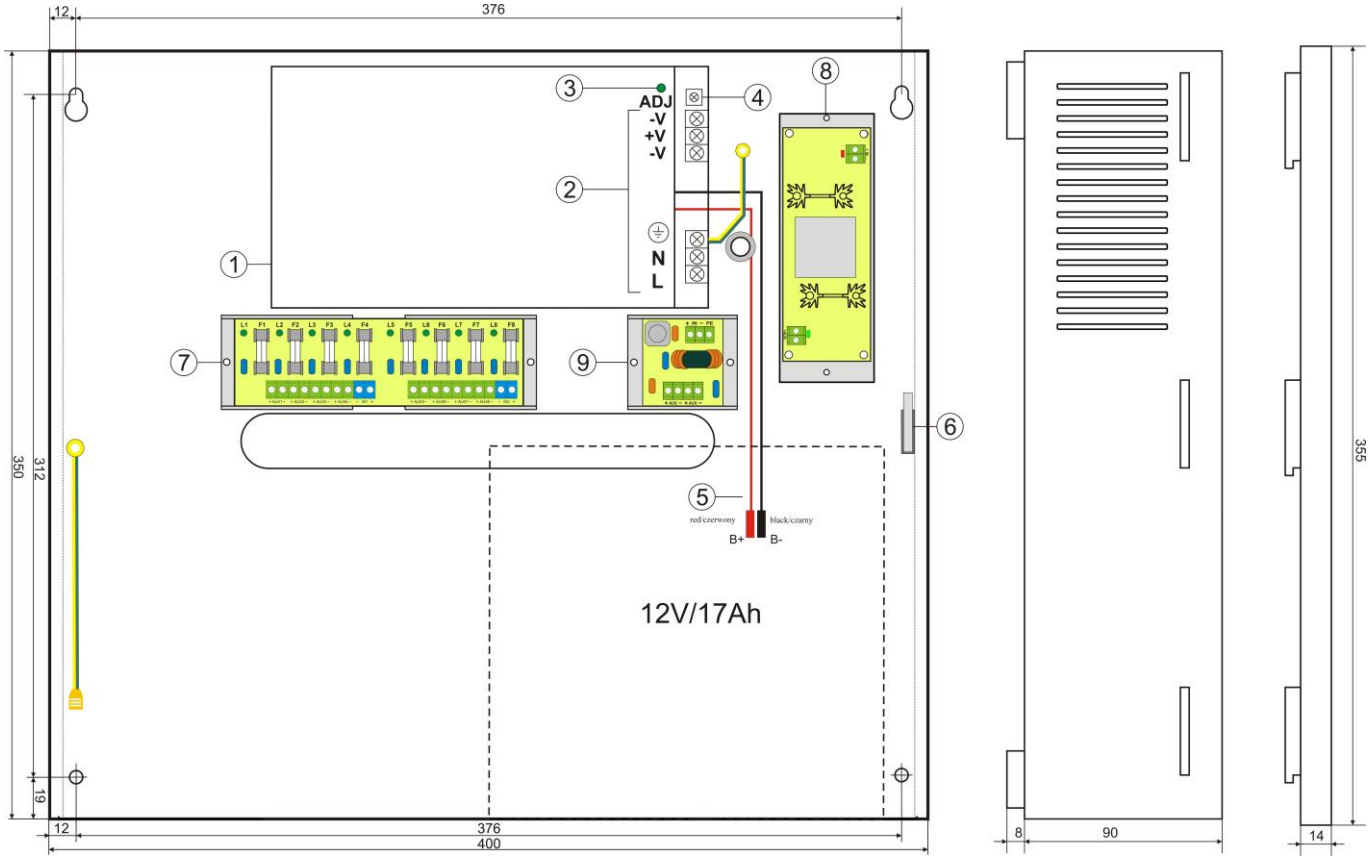

Fig.4. The view of the PSU.

1.4. Specifications:

- electrical specifications (tab.4)
- mechanical specifications (tab.5)
- operation safety (tab.6)
- operating specifications (tab.7)

Table 4. Electrical specifications.

PSU type	A (EPS - External Power Source)
Mains supply	176÷264V AC / 50Hz
Current consumption	1,3A @230V AC
PSU's power	140W
Efficiency	80%
Output voltage – Fuse base for fuse strips 8x Output voltage – recorder	11V÷13,8V DC – buffer operation 9,5V÷13,8V DC – battery-assisted operation **12V DC** maintained regardless of the state of battery charge
Output current t_{AMB}<30°C	**8x0,75A + 4A recorder + 1A battery charging*** **Total current of the receivers + battery 11A* max.** *** see chart 1**
Output current t_{AMB}=40°C	**8x0,3A + 4A recorder + 1A battery charging*** **Total current of the receivers + battery 8A* max.** *** see chart 1**
Output voltage adjustment range	12÷14V DC
Ripple voltage	120mV p-p max.
PSU current consumption	0,2A
Battery charging current	1A
Approximate backup time	1h 30min
Short-circuit protection SCP	STRIP LB8: 8x F 1A glass fuse, Output filter 1xF 5A
Overload protection OLP	105% ÷ 150% of the PSU power, automatic recovery
Battery circuit protection SCP and reverse polarity connection	glass fuse 15A
Surge protection	varistors

* See chart 1

Over voltage protection OVP	>16V (automatic return)
Deep discharge protection UVP	U<9,5V (± 5%) – disconnection of battery terminal
Sabotage protection: - TAMPER output indicating enclosure opening	- micro-switches, NC contacts (enclosure closed), 0,5A@50V DC (max.)
Optical indication: front panel of the PSU - AC OK.; LED indicating the AC power status - DC OK.; LED indicating the DC supply at the PSU output	- red, normal status – on, failure: off - green, normal status – on, failure: off

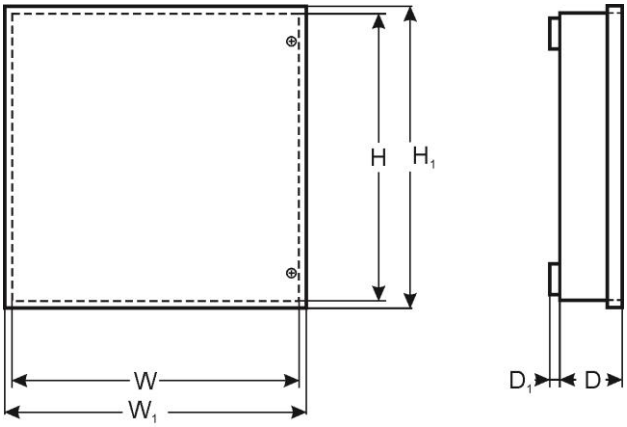

Table 5. Mechanical specifications.

Dimensions	W=400, H=350, D+D_1=92+8 [+/- 2mm] W_1=405, H_1=355 [+/- 2mm]
The dimensions of the battery compartment	180x170x80mm (WxHxD) max
Fixing	See Fig. 3
Net/gross weight	4,3/4,6 kg
Enclosure	Steel plate DC01 1,0mm, colour RAL 9003
Closing	Cheese head screw x 2 (at the front), lock assembly possible
Connectors	Mains supply: Φ0,63-2,50 (AWG 22-10) Outputs for cameras: Φ0,63-2,50 (AWG 22-10) Recorder outputs: power cord 55cm, terminated with the DC 5,5/2,1 plug Battery outputs: 6,3F-2,5/40cm TAMPER output: wires
Notes	The enclosure does not adjoin the assembly surface so that cables can be led.

Table 6. Operation safety.

Protection class PN-EN 60950 -1:2007	I (first)
Protection grade PN-EN 60529: 2002 (U)	IP20
Electrical strength of insulation: - between input (network) circuit and output circuits of the PSU (I/P-O/P) - between input circuit and PE protection circuit (I/P-FG) - between output circuit and PE protection circuit (O/P-FG)	 3000 V/AC min. 1500 V/AC min. 500 V/AC min.
Insulation resistance: - between input circuit and output or protection circuit	 100MΩ, 500V DC

Table 7. Operating specifications

Environmental class	II
Operating temperature	-10ºC...+40ºC
Storage temperature	-20ºC...+60ºC
Relative humidity	20%...90%, without condensation
Vibrations during operation	unacceptable
Impulse waves during operation	unacceptable
Direct insolation	unacceptable
Vibrations and impulse waves during transport	Wg PN-83/T-42106

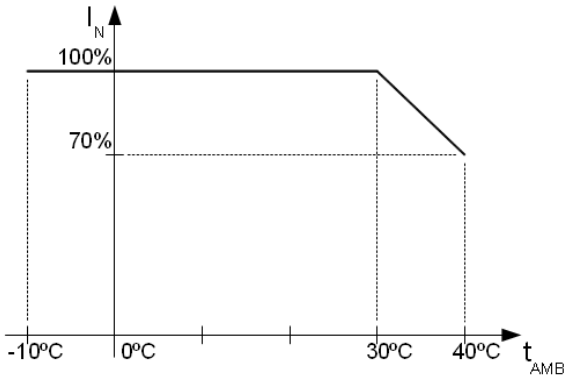

Chart 1. Acceptable output current from the PSU depending on ambient temperature.

2. Installation.

2.1 Requirements.

The buffer PSU is to be mounted by a qualified installer, holding relevant permits and licenses (applicable and required for a given country) for 230V AC interference and low-voltage installations. The unit should be mounted in confined spaces, in accordance with the 2nd environmental class, with normal relative humidity (RH=90% maximum, without condensation) and temperature from -10°C to +40°C. The PSU shall work in a vertical position that guarantees sufficient convectional air-flow through ventilating holes of the enclosure.

The power supply load balance should be done before installation:

Output current 8x0,75A + 4A recorder + 1A battery charging*

Total current of the receivers + battery 11A* max.

As the PSU is designed for a continuous operation and is not equipped with a power-switch, therefore an appropriate overload protection shall be guaranteed in the power supply circuit. Moreover, the user shall be informed about the method of unplugging (most frequently through separating and assigning an appropriate fuse in the fuse-box). The electrical system shall follow valid standards and regulations.

2.2 Installation procedure.

1. Before installation, make sure that the voltage in the 230V power-supply circuit is cut off.
2. Mount the PSU in a selected location and connect the wires.
3. Connect the power cables (~230V AC) to L-N terminals of the PSU. Connect the ground wire to the terminal marked by the earth symbol – "⏚" on the plate. Use a three-core cable (with a yellow and green PE protection wire) to make the connection. Lead the cables to the appropriate terminals of the connection board through the bushing.

The shock protection circuit shall be performed with a particular care, i.e. the yellow and green wire coat of the power cable shall stick to one side of the terminal marked with the '⏚' earth symbol in the PSU enclosure. Operation of the power supply without a properly made and fully operational shock protection circuit is UNACCEPTABLE! It can result in device damage or an electric shock.

4. Mount the recorder in a designated area of the housing.
5. Connect the power supply of the DVR (by default, the device is equipped with a cable terminated with the DC 5,5/2,1 plug).
6. Connect the camera cables to the **AUX1…AUX8** connectors of the LB8 modules.
7. Connect the power (~230V).
8. Check the PSU output voltage:
- the PSU voltage without load should amount to U=13,8V DC.
9. Connect the battery (mind the colours):
- battery output (+): BAT+ cable / red,
- battery output (-): BAT – cable / GND / black.
10. Check the PSU operation indicator: green LED on the power supply module.
11. After installing and checking proper working, the enclosure can be closed.

* See chart 1

3. Operating status indication.

The PSU is equipped with two diodes on the front panel:

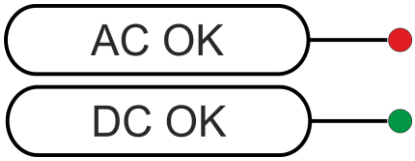

RED LED:
- on – The PSU supplied with 230V AC voltage
- off – no 230V AC mains supply

GREEN LED:
- on – DC voltage at the AUX output
- off - no DC voltage at the AUX output

4. Operation and use.

4.1 Overload or short circuit of the PSU output (SCP activation).

In case of overload, the output voltage is automatically shut off, and so is the LED indicator. The restoration of the voltage takes place immediately once the failure (overload) is over.

4.2 Overload or short circuit of the recorder's module or CCTV camera module.

The modules of the recorder and CCTV cameras are protected against a short circuit by fuses (fuse-elements). In case of fuse replacement, use a replacement of the same parameters, in conformity with specific norms and power balance.

4.3 Battery-assisted operation.

The power supply is equipped with deep discharge battery protection (UVP). If the voltage at the battery terminals drops below 9,5V during battery-assisted operation, the batteries will be disconnected.

4.4 Maintenance.

Any and all maintenance operations may be performed following the disconnection of the PSU from the power supply network. The PSU does not require performing any specific maintenance measures. However, in case of dust, clean the interior with compressed air. In case of fuse replacement, use a replacement of the same parameters.

WEEE MARK

According to the EU WEE Directive – It is required not to dispose of electric or electronic waste as unsorted municipal waste and to collect such WEEE separately.

CAUTION! *The power supply unit is adapted for a sealed lead-acid battery (SLA). After the operation period it must not be disposed of but recycled according to the applicable law.*

Pulsar
Siedlec 150, 32-744 Łapczyca, Poland
Tel. (+48) 14-610-19-40, Fax. (+48) 14-610-19-50
e-mail: biuro@pulsar.pl, sales@pulsar.pl
http:// www.pulsar.pl, www.zasilacze.pl