PSBSOF 1024

v.1.0

PSBSOF 27,6V/1A/OF

Enclosed switch mode buffer power supply

with technical outputs.

EN**

Edition: 4 from 07.08.2017

Supersedes the edition: 3 from 01.06.2016

PSU features:

- uninterruptible power supply DC 27,6V/1A
- supply voltage AC 230V
- high efficiency 80%
- low voltage ripple
- battery charging and maintenance control
- deep discharge battery protection (UVP)
- battery charging current 0,2A/0,5A, jumper selectable
- START button to start the battery
- battery output protection against short-circuit and reverse connection
- LED indication
- EPS technical output of 230V power failure – OC type
- PSU technical output indicating PSU failure – OC type
- LoB technical output indicating low battery voltage – OC type
- Optional installation of the MPSBS relay module changing technical outputs of the OC type to relay type
- adjustable times of 230V AC failure indication
- Protection type:
  - SCP short-circuit protection
  - Overheat protection OHP
  - surge protection
  - overload protection OLP
- warranty - 5 years from the production date

TABLE OF CONTENTS:

1. Technical description.
1.1 General description
1.2 Block diagram
1.3 Description of components and connectors
1.4 Technical parameters
2. Installation.
2.1 Requirements
2.2 Installation procedure
3. Power supply operation indication.
3.1 Optical indication - LEDs on the PCB of the PSU
3.2 Optical indication with an additional module
3.3 Technical outputs OC type
3.4 Relay technical outputs Relay technical outputs
4. Service and operation
4.1 Overload or short-circuit the power supply output (SCP activation)
4.2 Running the PSU from the battery.
4.3 Deep discharge battery protection UVP.
4.4 Maintenance

1. Technical description.

1.1 General description.

A buffer PSU is designed for uninterrupted supply of devices requiring stabilized voltage of **24V DC (+/- 15%).** The PSU supplies voltage of **U=27,6V DC** and total current capacity of**:**

1. Output current 1A (without a battery)
2. Output current 0,8A + 0,2A battery charging
3. Output current 0,5A + 0,5A battery charging

Total current + battery is max. 1A

In case of mains power loss, the unit will instantly switch to battery operation. The power supply is placed on a metal plate (color RAL 9003), adapted for mounting with screws or optionally using the handles mounted on a DIN rail (PKAZ107).

OPTIONAL POWER SUPPLY CONFIGURATIONS:
(visualization available at www.pulsar.pl)

1. **Buffer power supply PSBSOF 27,6V/relay module MPSBS**
   - PSBSOF1024 + MPSBS
2. **Buffer power supply PSBSOF 27,6V/2x0,5A/relay module MPSBS**
   - PSBSOF1024 + LB2 2x0,5A (AWZ586) + MPSBS

1.2 Block diagram (Fig.1).

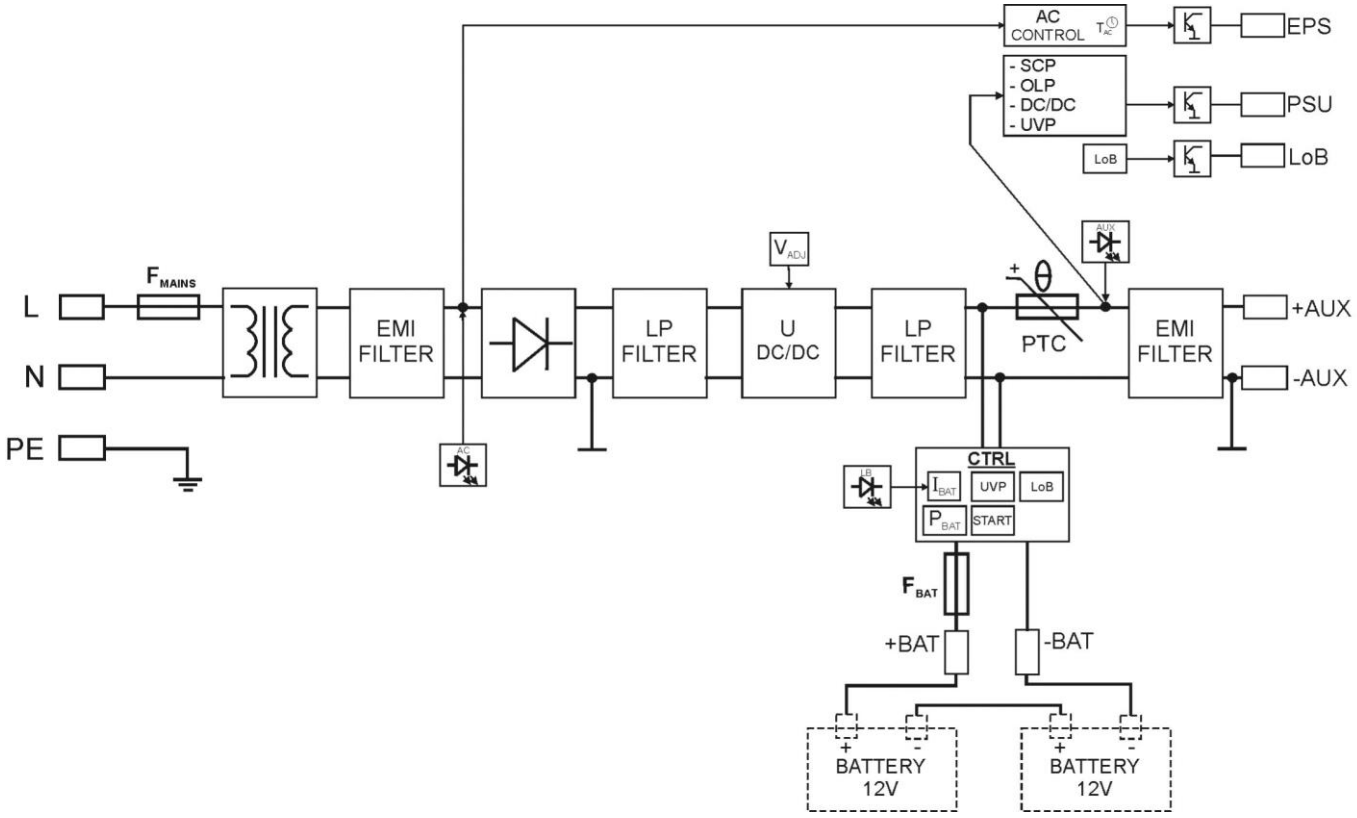

Fig.1. Block diagram of the PSU.

1.3 Description of components and power supply terminals (Table 1, Fig.2).

Table 1. Components of the Power supply PCB (Printed Circuit Board) (see Fig. 2).

Element nr	Description
1	**P_{BAT} Jumper** – configuration of discharged battery disconnection system (UVP) • **P_{BAT}** = ▬ discharged battery disconnection system OFF • **P_{BAT}** = ▪▪ discharged battery disconnection system ON **T_{AC} Jumper**- setting the delay time for AC power failure indication • **T_{AC}** = ▬ delay time T= 60s • **T_{AC}** = ▪▪ delay time T= 10s Description: ▬ jumper on, ▪▪ jumper off
2	**START** button (running the PSU from the battery)
3	**V_{ADJ}** potentiometer, DC 24 ÷ 29V voltage adjustment
4	**F_{BAT}** fuse in the battery circuit, F2A / 250V
5	**Terminals:** **~AC~** – AC power input **EPS** – technical output of AC power failure indication hi-Z state = AC power failure 0V state = AC power - O.K. **PSU** – technical output of PSU failure indication hi-Z state = failure 0V state = PSU status O.K. **LoB** – technical output of low battery voltage indication hi-Z state = battery voltage U_{BAT} <23V 0V state = battery O.K. **+BAT-** – terminals for battery connection **+AUX-** – DC power output, (+AUX= +U, -AUX=GND) Description: hi-Z – high impedance, 0V – connection to the ground GND
6	**LEDs** – optical indication: **AC** – AC power **LB** – battery charging process **AUX** – DC output voltage
7	Optical indication output connector (PKAZ108 version)
8	**I_{BAT} Jumper;** - battery charging current configuration • **I_{BAT}** = ▬ Ibat =0,2A • **I_{BAT}** = ▪▪ Ibat =0,5A Description: ▬ jumper on, ▪▪ jumper off

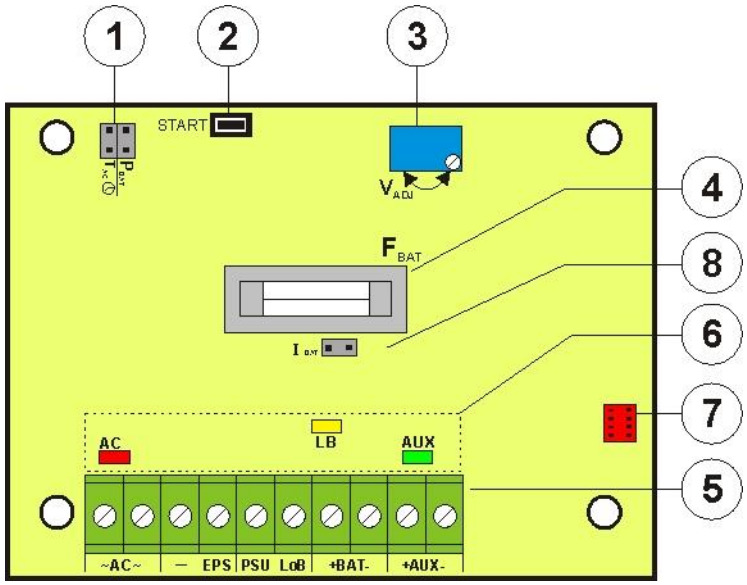

Fig. 2. The view of the Power supply PCB.

Table 2. Components of the PSU (See Fig. 3).

Component no.	Description
1	Isolation transformer
2	Printed Circuit Board (see Table 1, Fig. 2)
3	Holes for mounting clamps for DIN rail (PKAZ107)
4	F_{MAINS} fuse in the power supply circuit 230V, T500mA / 250V
5	**L-N** power supply connector, 230V AC, PE protective connector
6	Battery connectors: positive: +BAT = red, negative: - BAT = black
7	Optical indication module (PKAZ108 version)

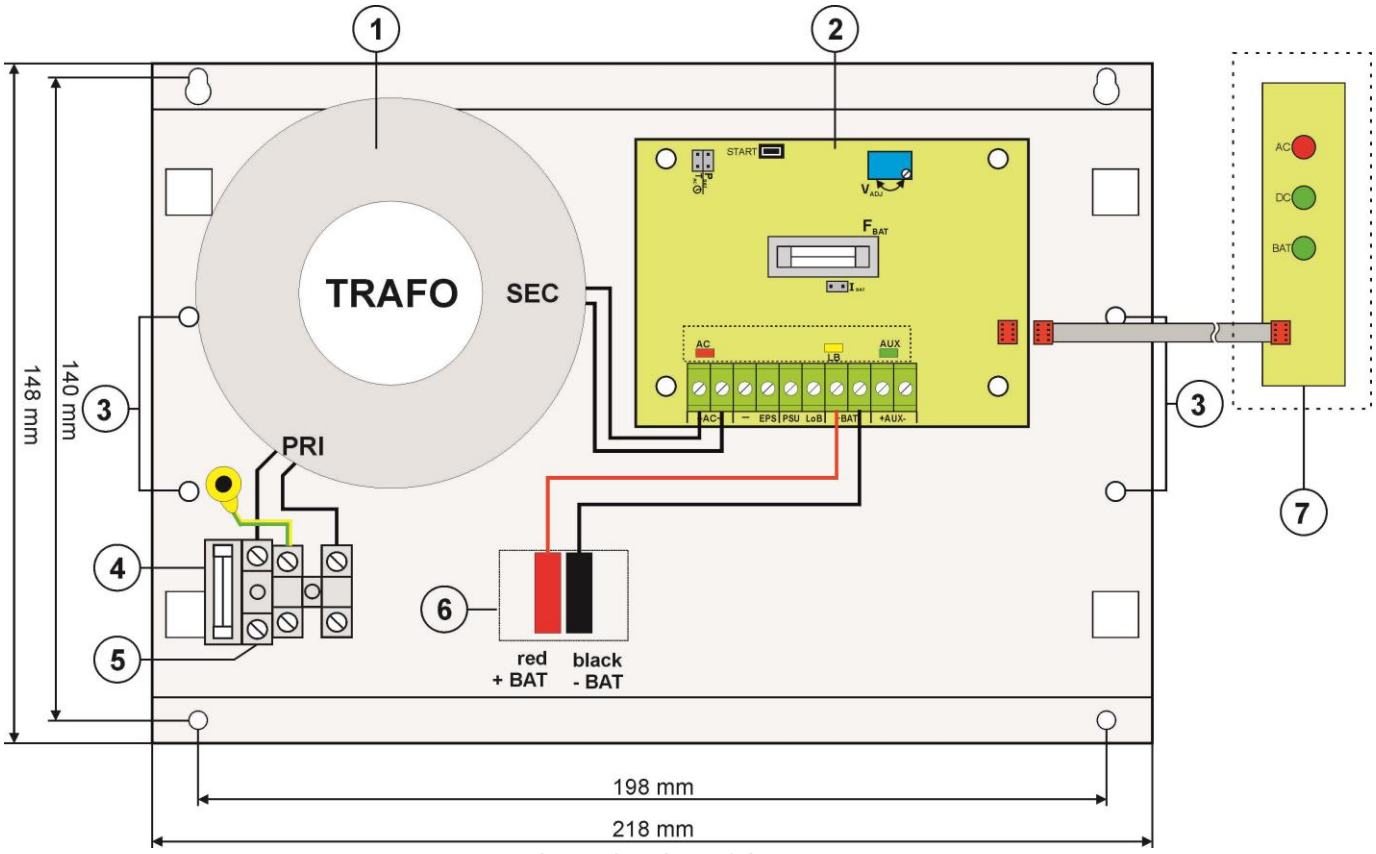

Fig.3. The view of the PSU.

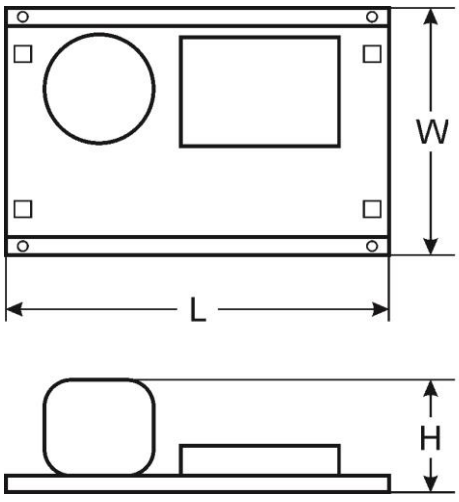

1.4 Technical parameters:

- Electrical parameters (Table 3)
- Mechanical parameters (Table 4)
- Safety of use (Table 5)
- Operation parameters (Table 6)

Table 3. Electrical parameters

PSU type:	A (EPS - External Power Source)
Mains supply	230V AC / 50Hz (-15%/+10%)
Current consumption	0,2A @230V AC
PSU's power	28W
Efficiency	80%
Output voltage	22V÷ 27,6V DC – buffer operation 20V÷ 27,6V DC – battery operation
Output current	**1A (without a battery)** **0,8A + 0,2A battery charging** **0,5A + 0,5A battery charging**
Output voltage adjustment range	24÷29V DC
Ripple voltage	30mV p-p max.
PSU current consumption	20 mA
Battery charging current	0,2A or 0,5A– jumper selectable
Short-circuit protection SCP	Electronic - current limitation and/or activation of the F_{BAT} melting fuse in the battery circuit (failure requires fuse replacement). Automatic return
Overload protection OLP	110-150% of the PSU power, manual restart (failure requires the disconnection of the DC output)
Battery circuit protection SCP and reverse polarity connection	F2A- current limitation, the F_{BAT} melting fuse (failure requires fuse replacement)
Surge protection	varistors
Deep discharge battery protection UVP	U<20V (± 0,5V) – disconnection of battery terminal
Optical indication: front panel of the PSU - AC; LED indicating the AC power status - AUX; LED indicating the DC supply at the PSU output - LB-LED for battery charging:	 - red, normal operation: permanently illuminated, failure: off - green, normal operation: permanently illuminated, failure: off - yellow, battery charging: permanently illuminated, fully charged: off
Technical outputs: - EPS; output indicating AC power failure - PSU; output indicating no DC power/PSU failure - LoB output indicating low battery voltage	 - OC type: 50mA max. Normal operation: L state (0V), failure: hi-Z state, - delay time 10s/60s (+/-20%) – jumper selectable **T_{AC}** - OC type: 50mA max. Normal operation: L state (0V), failure: hi-Z state, - OC type, 50mA max. Normal operation (U_{BAT} >23V): L state (0V), failure (U_{BAT} <23V): hi-Z state The power supply unit does not feature a battery detection function.
Fuses: - F_{MAINS} - F_{BAT}	 T 500mA / 250V F 2A / 250V

Table 4. Mechanical parameters.

Dimensions	L=218, W=148, H=60 [mm] (+/- 2)
Net/gross weight	1,4kg / 1,5kg
Enclosure	Steel plate, DC01 1mm color RAL 9003
Terminals	Mains supply 230V AC: Φ0,51÷2 (AWG 24-12) Outputs: Φ0,41÷1,63 (AWG 26-14) BAT battery outputs: 6,3F-2,5, 30cm
Mounting	Mounting screws or DIN rail holders (see fig., 3).

Table 5. Safety of use.

Protection class PN-EN 60950-1:2007	I (first)
Insulation electrical strength: - between input (network) circuit and the output circuits of the PSU (I/P-O/P) - between input circuit and PE protection circuit (I/P-FG) - between output circuit and PE protection circuit (O/P-FG)	 3000 V/AC min. 1500 V/AC min. 500 V/AC min.
Insulation resistance: - between input circuit and output or protection circuit	 100 MΩ, 500V/DC

Table 6. Operation parameters.

Environmental class	II
Operating temperature	-10ºC...+40ºC
Storing temperature	-20ºC...+60ºC
Relative humidity	20%...90%, no condensation
Vibrations during operation	unacceptable
Surges during operation	unacceptable
Direct insolation	unacceptable
Vibrations and surges during transport	According to the PN-83/T-42106 standard

2. Installation.

2.1 Requirements.

The buffer PSU should be mounted by a qualified installer, holding relevant permits and licenses (applicable and required for a given country) for 230V/AC and low-voltage installations. The unit should be mounted in confined spaces, in accordance with the 2nd environmental class, with normal relative humidity (RH=90% maximum, no condensation) and temperature range from -10°C up to +40°C. The power supply should operate in a vertical position in order to provide free and convectional air flow through ventilating holes of the enclosure.

The power supply load balance should be done before installation:

1. Output current 1A (without a battery)
2. Output current 0,8A + 0,2A battery charging
3. Output current 0,5A + 0,5A battery charging

Total current of the receivers + battery is max. 1A

The power supply is designed for a continuous operation and is not equipped with a power-switch. Therefore, an appropriate overload protection in the power supply circuit should be provided. Moreover, the user should be informed how to disconnect the power supply unit from the mains supply (usually by assigning an appropriate fuse in the fuse box). The electrical system shall be made in accordance with applicable standards and regulations. The power supply shall be mounted in a close casing (a cubicle, a terminal device) and in order to fulfill LVD and EMC requirements the rules for power-supply, encasing and shielding shall be observed according to application.

2.2 Installation procedure.

1. **Before installation, make sure that the voltage in the 230V power-supply circuit is cut off.**
2. Mount the power supply in the enclosure or cabinet and lead the connection cables.
3. Connect the power cables (230V AC) to the L-N terminals of the PSU. Connect the ground wire to the terminal marked with the PE symbol (power supply module connector). Use a three-core cable (with a yellow and green PE protection wire) to make the connection.

The shock protection circuit shall be done with a particular care: the yellow and green wire coat of the power cable should be connected to the terminal marked with the PE symbol. Operation of the PSU without the properly made and fully operational shock protection circuit is UNACCEPTABLE! It can cause damage to the equipment or an electric shock

4. Connect the receiver cables to the AUX terminals at the power supply board.
5. If needed, connect the device cables to the technical outputs:
   - EPS; technical output indicating AC power failure
   - PSU; technical output indicating PSU failure.
   - LoB; technical output indicating low battery voltage

- Optional installation of the MPSBS relay module changing technical outputs of the OC type to relay type (page 9, section. 3.4)

6. Use the I_{BAT} jumper to set the maximum battery charging current, taking into account the battery parameters.
7. Use the P_{BAT} jumper to set to turn on/off deep discharge battery protection U<20V (+/-5%). **Deep discharge battery protection is ON when the P_{BAT} jumper is OFF.**
8. Mount the battery in the battery compartment of the enclosure. Connect the batteries with the PSU paying special attention to the correct polarity.
9. Switch on the 230V AC supply. The corresponding LEDs on the power supply PCB should be ON: red AC and green AUX. The yellow LB LED should light up while charging.
10. Check the output voltage (the power supply voltage without load should be 27,2V ÷ 27,8V, 22V ÷ 27,6V while battery charging). If the voltage requires adjustment, use the V_{ADJ}, potentiometer while monitoring the voltage at the AUX output of the power supply.
11. Check the current consumption of the receivers, taking into account the battery charging current, so as not to exceed the total current efficiency of the PSU (section 1.1).
12. Mount the additional optical indication plate and connect to the socket on the PCB of the power supply using a cable (Fig. 2 pt. 7).
13. Close the cover after installing and checking the operation of the power supply.

3. Power supply operation indication.

3.1 Power supply operation indication.

Additionally, the PSU is fitted with three LED lights indicating the operating status: AC, LB and AUX at the PCB of the PSU:

- **AC - red LED**: is permanently illuminated during normal operation (AC power ON). No AC power is indicated by turning off the LED.
- **LB - yellow LED**: indicates battery charging. The light intensity depends on the charging current.
- **AUX** - **green LED:** indicates DC power status at the PSU output. During normal operation, it is permanently illuminated. In case of short-circuit or output overload the LED is off.

3.2 Optical indication with the PKAZ108 additional module.

The PKAZ additional module is equipped with three LEDs indicating operation status: AC, DC, and BAT.

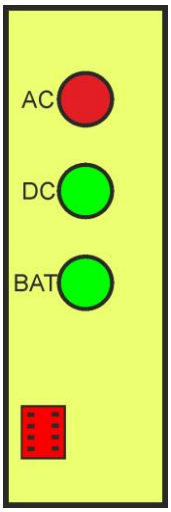

AC:
- on – The PSU supplied with 230V AC voltage
- off – no 230V AC mains supply

DC:
- on – DC voltage at the AUX output
- off - no DC voltage at the AUX output

BAT:
- on – battery voltage U_{BAT} > 23V
- off – battery voltage U_{BAT} < 23V

3.3 Technical outputs.

The PSU has indication outputs:

- **EPS - technical output indicating 230V AC power failure**.
  The output indicates 230V AC power failure. Under normal status – with the 230V AC supply on, the output is shorted to ground GND. In case of power failure, the PSU will switch the output into hi-Z high impedance state after a time set by the T_{AC} jumper.

- **PSU – output indicating PSU failure**.
  The output indicates PSU failure. Under normal status (correct operation) the output is shorted to ground GND. If there is no DC voltage at the output (eg short circuit), the output is switched into hi-Z high impedance state.
  PSU failure can be caused by the following events:
  - Short circuit at the output
  - Output overload
  - DC/DC voltage converter failure
  - Under voltage protection activation

- **LoB – output indicating low battery voltage.**
  The output indicates low battery voltage. Under normal status (U_{BAT} > 23V) the output is shorted to ground GND, when the battery voltage drops too low (U_{BAT} < 23V) the output is switched into hi-Z high impedance state.
  The power supply unit does not feature a battery detection function. In the case of no battery or non battery connected, the output is in the normal mode.

The power supply technical outputs are open collector (OC) type, as shown schematically below.

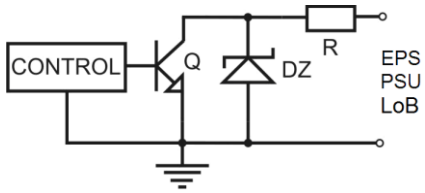

Fig. 4. Electrical diagram of the OC technical outputs.

3.4 Relay technical outputs.

If the OC type outputs are not sufficient to control the unit, it is possible to use the MPSBS relay module changing technical outputs of the OC type to relay type.

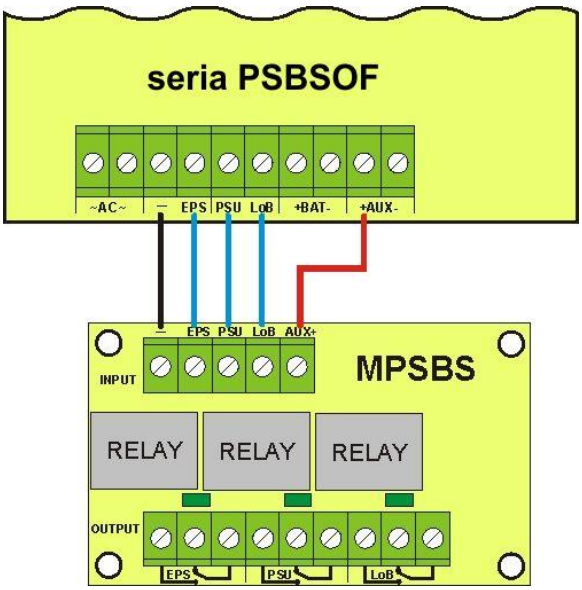

Fig. 5. The diagram of connecting the MPSBS module.

4. Service and operation.

4.1 Overload or short-circuit of the power supply output (SCP activation).

The AUX output of the PSU is protected against short-circuit by PTC polymer fuse. If the power supply load current exceeds Imax. (110% ÷ 150% @ 25°C of the PSU power), automatic disconnection of the output voltage, indicated by switching off the green LED, takes place. To restore the voltage at the output, disconnect the load from the power supply output for approximately 1 minute.

In case of a short-circuit at the AUX, BAT output or reverse battery connection, the F_{BAT} fuse in the battery circuit becomes permanently damaged. The voltage restoration at the BAT output requires fuse replacement.

4.2 Running the PSU from the battery.

The power supply is equipped with the button on the PCB allowing to run the PSU from the battery, when needed. To do that, press and hold the **START** button on the unit board for 1 second.

4.3 Deep discharge battery protection UVP.

The power supply is equipped with deep discharge battery protection (UVP). If the voltage at the battery terminals drops below 20V±0.5V during battery-assisted operation, the batteries will be disconnected. **The battery protection is on when the P_{BAT} jumper is off.**

Caution.
It is not recommended to disable UVP since deep discharge of the batteries reduces their ability to store energy, their capacity and lifetime.

4.4 Maintenance.

All maintenance procedures can be performed after disconnecting the power supply from the power network. The PSU does not require any specific maintenance; however, its interior should be cleaned with compressed air if used in dusty conditions. In case of fuse replacement, use only compatible replacement parts.

WEEE LABEL
Waste electrical and electronic equipment must not be disposed of with normal household waste. According to the European Union WEEE Directive, waste electrical and electronic equipment should be disposed of separately from normal household waste.

The power supply unit is adapted for cooperation with the sealed lead-acid batteries (SLA). After the operation period they must not be thrown but recycled according to the applicable law.

Pulsar
Siedlec 150, 32-744 Łapczyca, Poland
Phone (+48) 14-610-19-40, Fax (+48) 14-610-19-50
E-mail: biuro@pulsar.pl, sales@pulsar.pl
http:// www.pulsar.pl, www.zasilacze.pl