HPSB 11A12E

v.1.0

HPSB 13,8V/10A/65Ah

Buffer, switch mode power supply unit.

EN*

Edition: 8 from 24.10.2016

Supercedes the edition: 7 from 11.08.2014

GREEN POWER

Features:

- DC 13,8V/10A uninterruptible power supply*
- fitting battery: 65Ah/12V
- wide range of mains supply: 176÷264V
- high efficiency 83%
- battery charging and maintenance control
- excessive discharging (UVP) protection
- jumper selectable battery charge current 1A/4A
- battery output full protection against short-circuit and reverse polarity connection
- LED indication
- protections:
  - SCP short-circuit protection
  - OVP overvoltage protection
  - overvoltage protection (input AC)
  - against sabotage
  - overload protection (OLP)
- warranty – 2 year from the production date

CONTENTS:

1. Technical description.
1.1 General description
1.2 Block diagram
1.3 Description of PSU components and connectors.
1.4 Specifications
2. Installation.
2.1 Requirements
2.2 Installation procedure
3. Operating status indication.
3.1 LED indication of operating status
4. Operation and use.
4.1 Overload or short circuit of the PSU output (SCP on)
4.2 Disconnection of discharged battery
4.3 Maintenance

1. Technical description.

1.1 General description.

A buffer PSU is used for an uninterrupted supply to devices requiring stabilised voltage of **12V DC (+/-15%).** The PSU provides voltage of **13,8V DC.** Current efficiency:

1. Output current 10A + 1A battery charge*
2. Output current 7A + 4A battery charge*
Total device current + battery: 11A max *.

In case of power decay, a battery back-up is activated immediately. The PSU is constructed based on the switch mode PSU, with high energy efficiency. The PSU is housed in a metal enclosure (colour RAL 9003) which can accommodate a 65Ah/12V battery. A micro switch indicates door opening (front cover).

OPTIONAL POWER SUPPLY CONFIGURATIONS:
(visualisation available at: www.pulsar.pl)

1. Buffer power supply unit HPSB 13,8V/20x0,5A/65Ah.
- HPSB11A12E + 2xLB8 16x0,5A (AWZ578 or AWZ580) + LB4 4x0,5A (AWZ574 or AWZ576) + 65Ah

2. Buffer power supply unit HPSB 13,8V/10x1A/65Ah.
- HPSB11A12E + LB8 8x1A (AWZ579 or AWZ580) + LB2 2x1A (AWZ585 or AWZ586) + 65Ah

3. Buffer power supply unit HPSB 13,8V/24x0,3A/65Ah.
- HPSB11A12E + 3xLB8 24x0,3A (AWZ577 or AWZ580) + 65Ah

4. Buffer power supply unit HPSB 13,8V/2x12V/2x5A/65Ah.
- HPSB11A12E + 2xRN500(13,8V/12V) + 65Ah

5. Buffer power supply unit HPSB 13,8V/2x12V/16x0,5A/65Ah.
- HPSB11A12E + 2xRN500(13,8V/12V) + 2xLB8 16x0,5A (AWZ578 or AWZ580) + 65Ah

6. Buffer power supply unit HPSB 13,8V/2x12V/10x1A/65Ah.
- HPSB11A12E + 2xRN500(13,8V/12V) + 2xLB8 10x1A (AWZ579 or AWZ580) + 65Ah

* Refer to chart 1

7. Buffer power supply unit HPSB 13,8V/2x12V/8x1A/65Ah.
- HPSB11A12E + 2xRN500(13,8V/12V) + 2xLB4 8x1A (AWZ575 or AWZ576) + 65Ah

8. Buffer power supply unit HPSB 13,8V/5x5V÷7,4V/5x2A/65Ah.
- HPSB11A12E + 5xDCDC20 (5V÷7,4V/5x2A) + 65Ah

9. Buffer power supply unit HPSB 13,8V/3x5V÷7,4V/3x2A/65Ah.
- HPSB11A12E + 3xDCDC20 (5V÷7,4V/3x2A) +3xLB2 6x1A (AWZ585 or AWZ586) + 65Ah

1.2 Block diagram (fig.1)

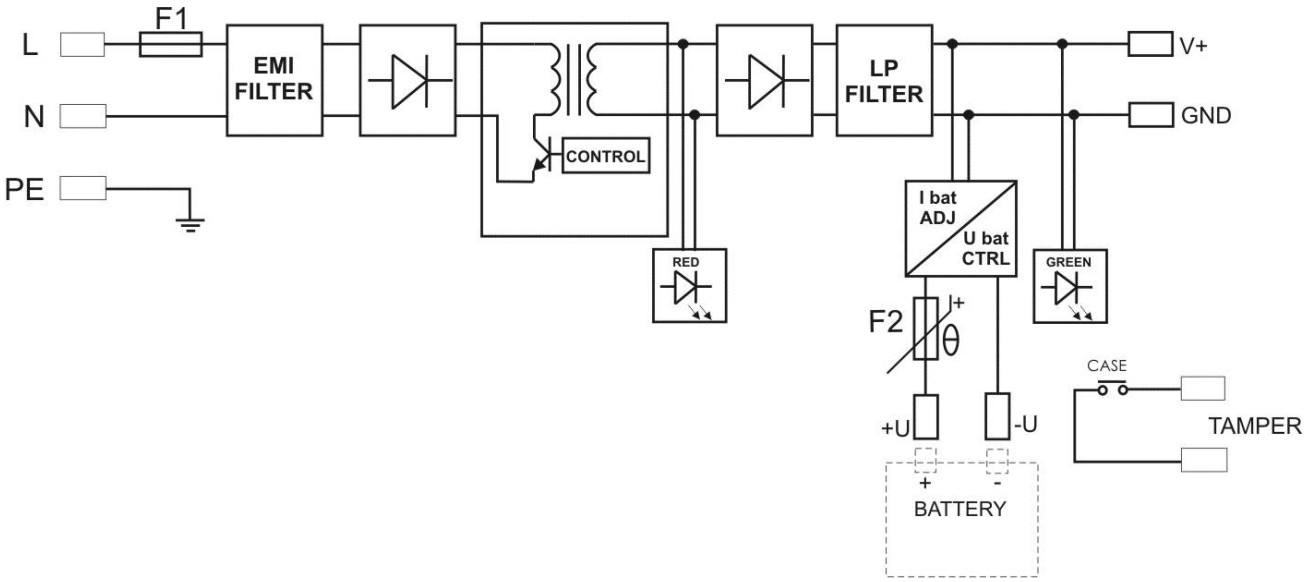

Fig.1. The block diagram of the PSU.

1.3 Description of PSU components and connectors (tab.1, tab.2, fig.2).

Part no. [Fig. 2]	Description
[1]	**PSU module**
[2]	**connectors (see: tab.2)**
[3]	**green LED** indicates AC power
[4]	**potentiometer,** output voltage adjustment
[5]	**BAT+/GND: battery outputs** + BAT=red, - GND=black
[6]	**TAMPER,** contact of sabotage protection **(NC)**
[7]	Additional connector for LED indication
[8]	Selection jumper for charging current: ▬ Ibat =1 A ▪▪ Ibat =4 A Legend: ▬ jumper installed, ▪▪ jumper removed. Factory settings: Ibat =1 A (jumper installed).

Tab.1. The components of the PSU.

Part no. [Fig. 2]	Description
L, N	**L-N** power supply connector
PE	Protection connector (electric shock protection)
V+ **V-**	DC supply output DC supply output (GND)

Tab.2. Output terminals of the PSU.

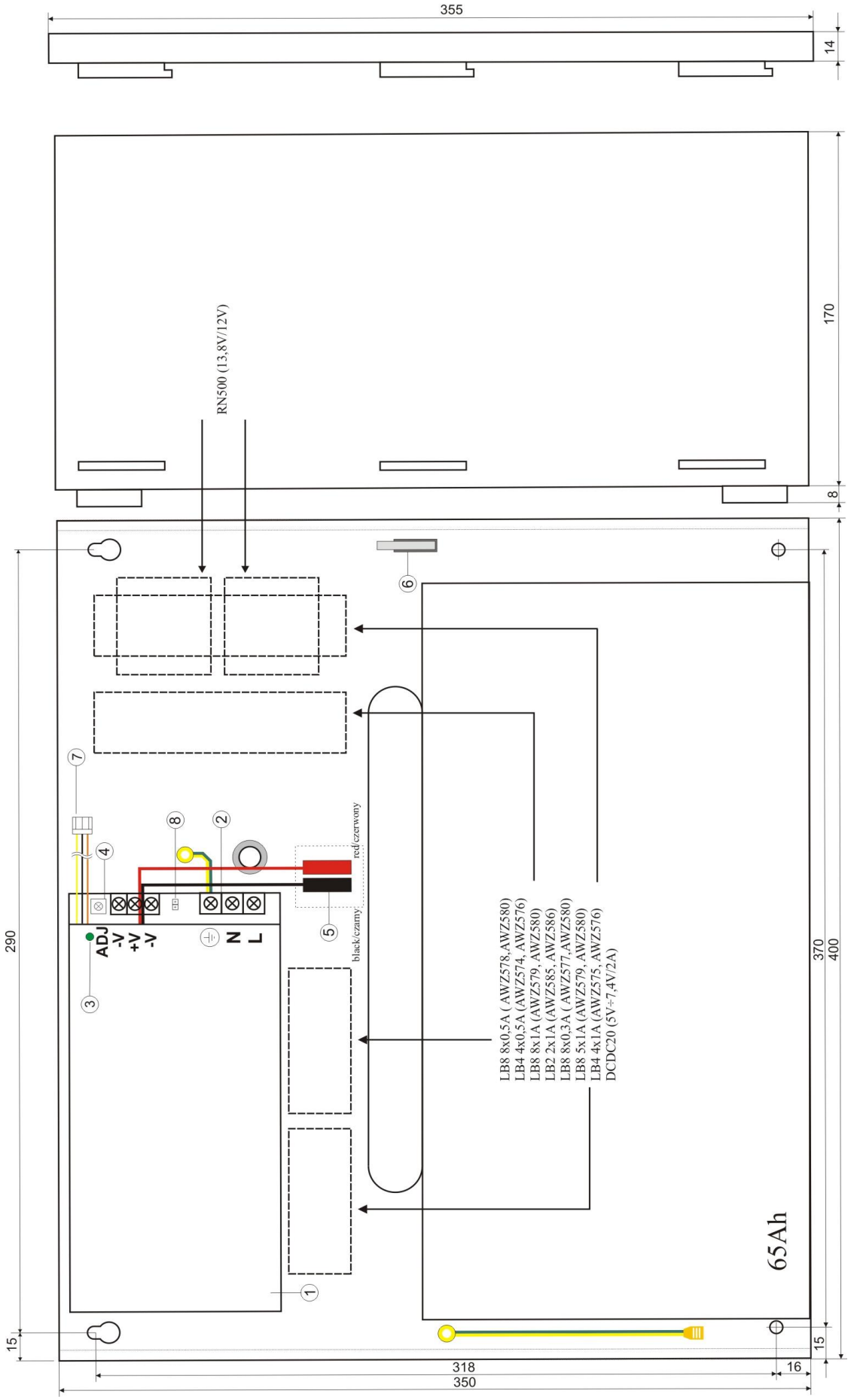

Fig.2. The view of the PSU.

1.4 Specifications:

- **electrical parameters (tab.3)**
- **mechanical parameters (tab.4)**
- **operation safety (tab.5)**
- **operating parameters (tab.6)**

Electrical parameters (tab. 3).

PSU type	A (EPS - External Power Source)
Mains supply	176÷264V AC
Current up to	1.4A@230VAC
Power frequency	50÷60Hz
Supply power	155W max.
Efficiency	83%
Output voltage	13,8V DC – buffer operation 9,5V÷13,8V DC – battery operation
Output current t_{AMB}<30°C	**10A + 1A battery charge - refer to chart 1** **7A + 4A battery charge - refer to chart 1**
Output current t_{AMB}=40°C	**6,7A + 1A battery charge - refer to chart 1** **3,7A + 4A battery charge - refer to chart 1**
Voltage adjustment range	12÷14VDC
Ripple	120mV p-p max.
Battery charge current	1A/4A max. @ 65Ah (± 5%) - jumper selectable
Short-circuit protection SCP	electronic, automatic return
Overload protection OLP	105-150% of the PSU power, automatic return
Battery circuit protection SCP and reverse polarity connection	PTC polymer fuse
Surge protection	varistors
Overvoltage protection OVP	>16V (activation requires disconnecting the load or supply for about 20 s.)
Excessive discharge protection UVP	U<9,5V (± 5%) – disconnect of connection battery
Protection against sabotage: - TAMPER indicates enclosure opening	- microswitch, NC contacts (enclosure closed), 0,5A@50V DC (max.)
LED indication: - AC diode indicating AC power status - AUX diode indicating DC power status at the PSU output	- red, normal status – on, failure: off - green, normal status – on, failure: off

Mechanical parameters (tab. 4).

Dimensions	W=400 H=350 D+D_1=173+8 [+/- 2 mm] W_1=405, H_1=355 [+/- 2 mm]
Fixation	See figure 2
Fitting battery	65Ah/12V (SLA) max. 360x175x165mm (WxHxD) max 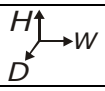
Net/gross weight	6,2 / 6,5 kg
Enclosure	Steel plate DC01, thickness: 1,0mm, colour: RAL 9003
Closing	Cheese head screw x 2 (at the front), lock assembly possible
Connectors	Power-supply: Φ0,63-2,50 (AWG 22-10) Outputs: Φ0,63-2,50 (AWG 22-10), battery output BAT: 6,3F-2,5 TAMPER output: wires
Notes	The enclosure does not adjoin the assembly surface so that cables can be led. Convectional cooling.

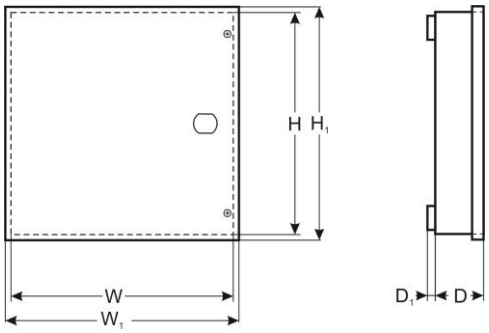

Operation safety (tab.5).

Protection class PN-EN 60950-1:2007	I (first)
Protection grade PN-EN 60529: 2002 (U)	IP20
Electrical strength of insulation: - between input input and output circuits of the PSU (I/P-O/P) - between input circuit and PE protection circuit (I/P-FG) - between output circuit and PE protection circuit (O/P-FG)	 3000 V/AC min. 1500 V/AC min. 500 V/AC min.
Insulation resistance: - between input circuit and output or protection circuit	 100 MΩ, 500V/DC

Operating parameters (tab.6).

Operating temperature	-10ºC...+40ºC (see: chart 1)
Storage temperature	-20ºC...+60ºC
Relative humidity	20%...90%, without condensation
Vibrations during operation	unacceptable
Impulse waves during operation	unacceptable
Direct insulation	unacceptable
Vibrations and impulse waves during transport	According to PN-83/T-42106

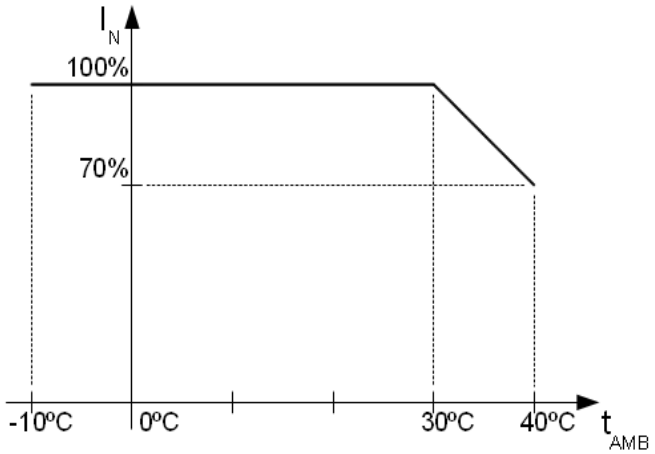

Chart 1. Acceptable output current from the PSU depending on ambient temperature.

2. Installation.

2.1 Requirements.

The buffer PSU shall be mounted by a qualified installer with appropriate permissions and qualifications for 230V/AC installations and low-voltage installations (required and necessary for a given country). The device shall be mounted in confined spaces, according to the environment class II, with normal air humidity (RH=90% max. without condensation) and the temperature from -10°C to +40°C. The PSU shall work in a vertical position that guarantees sufficient convectional air-flow through ventilating holes of the enclosure.

Before installation, prepare a PSU load balance:

1. Output current 10A + 1A battery charge*
2. Output current 7A + 4A battery charge*
Total device current + battery: 11A max*.

As the PSU is designed for a continuous operation and is not equipped with a power switch, therefore an appropriate overload protection shall be guaranteed in the power supply circuit. Moreover, the user shall be informed about the method of unplugging (usually through assigning an appropriate fuse in the fuse-box). The electrical system shall follow valid standards and regulations.

* Refer to chart 1

2.2 Installation procedure.

1. Before installation, cut off the voltage in the 230V power supply circuit.
2. Mount the PSU in a selected location and connect the wires.
3. Connect the power cables (~230Vac) to L-N clips of the PSU. Connect the ground wire to the clip marked by the earth symbol PE. Use a three-core cable (with a yellow and green PE protection wire) to make the connection. Lead the cables to the appropriate clips through the insulating bushing of the connection board.

The shock protection circuit shall be performed with a particular care, i.e. the yellow and green wire coat of the power cable shall stick to one side of the terminal - marked with ‘⏚‘ symbol on the PSU enclosure. Operation of the PSU without the properly made and fully operational shock protection circuit is UNACCEPTABLE! It can cause a device failure or an electric shock.

---

4. Connect the receivers’ cables to the terminals V+ (+), V-(-) of the PSU module.
5. Connect the power (~230V)
6. Connect the battery (mind the colours):
- battery output (+V): BAT+ cable / red,
- battery output (0V): BAT – cable / GND / black.
7. Check the PSU operation indicator: green LED.
8. Check the PSU output voltage:
- the PSU voltage without load should amount to U=13.8V DC.
9. After installing and checking proper working, the enclosure can be closed.

3. Operating status indication.

3.1 LED indication of operating status.

The PSU is equipped with two diodes on the front panel:

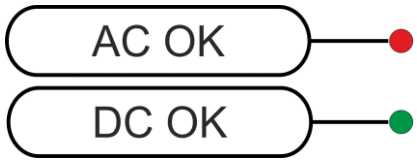

RED LED:
- on – the PSU is supplied with 230V AC
- off – no 230V AC supply

GREEN LED:
- on – DC voltage in the AUX output of the PSU
- off – no DC voltage in the AUX output of the PSU

4. Operation and use.

4.1 Overload or short circuit of the PSU output (SCP on)

In case of overload, the output voltage is automatically shut off, and so is the LED indicator. The restoration of the voltage takes place immediately after the failure (overload) is over.

4.2 Disconnection of discharged battery.

The PSU is equipped with the discharged battery disconnection system. During the battery-assisted operation, reducing voltage below 9,5V at the battery terminals will cause battery disconnection.

4.3 Maintenance.

Any and all maintenance operations may be performed following the disconnection of the PSU from the power supply network. The PSU does not require performing any specific maintenance measures, however, in case of significant dust rate, its interior is recommended to be cleaned with compressed air.

WEEE LABEL
Waste electrical and electronic equipment must not be disposed of with normal household waste. According to the European Union WEEE Directive, waste electrical and electronic equipment should be disposed of separately from normal household waste.

CAUTION! *The power supply unit is adapted for cooperation with the sealed lead-acid batteries (SLA). After the operation period they must not be thrown but recycled according to the applicable law.*

Pulsar sp. j.
Siedlec 150, 32-744 Łapczyca, Poland
Tel. (+48) 14-610-19-40, Fax. (+48) 14-610-19-50
E-mail: biuro@pulsar.pl, sales@pulsar.pl
http:// www.pulsar.pl, www.zasilacze.pl