PSBSH 2012B

v.1.2

PSBSH 13,8V/2A/7Ah/HERMETIC

Buffer switch mode power supply unit,

EN**

Edition: 7 from 02.11.2017

Supercedes the edition: 6 from 08.06.2017

Features:

- DC 13,8V/2A uninterruptible power supply
- fitting battery: 7Ah/12V
- supply voltage AC 230V
- high efficiency 71%
- low voltage ripple
- battery charging and maintenance control
- excessive discharging (UVP) protection
- battery charge current 0,2A/0,5A jumper selectable
- START facility for manual battery connection
- battery output protection against short-circuit and reverse connection
- EPS technical output of 230V power failure – OC type
- PSU technical output indicating PSU failure – OC type
- LoB technical output indicating low battery voltage – OC type
- adjustable times indicating 230V power failure
- protections:
  - SCP short-circuit protection
  - OHP overheat protection
  - overvoltage protection
  - against sabotage - opening of the enclosure
  - OLP overload protection
  - IP65 ABS, hermetic enclosure
- warranty – 2 year from the production date

CONTENTS:

1. Technical description.

1.1 General description.

A buffer PSU is intended for an uninterrupted supply to alarm systems devices requiring stabilized voltage of **12V DC (+/-15%).** The PSU provides voltage of **13,8V DC.** Current efficiency:

1. **Output current 2A (without battery)**
2. **Output current 1,8A + 0,2A battery charge**
3. **Output current 1,5A + 0,5A battery charge**

Total device current + battery: 2A max.

In case of power decay, a battery back-up is activated immediately. The PSU is located in an ABS enclosure which can accommodate a 7Ah/12V. Battery and features a microswitch indicating door opening (front cover).

OPTIONAL POWER SUPPLY CONFIGURATIONS:
(visualization available at www.pulsar.pl)

1. **Buffer power supply PSBSH 13,8V/2x1A/7Ah**
   - PSBSH 2012B + LB2 2x1A (AWZ585, AWZ586) + 7Ah
2. **Buffer power supply PSBSH 13,8V/4x0,5A/7Ah**
   - PSBSH 2012B + LB4 4x0,5A (AWZ574, AWZ576) + 7Ah
3. **Buffer power supply PSBSH 13,8V/12V/2A/7Ah**
   - PSBSH 2012B + RN250 (13,8V/12V) + 7Ah
4. **Buffer power supply PSBSH 13,8V/5V÷7,4V/2A/7Ah**
   - PSBSH 2012B + DC/DC20SD (5V÷7,4V/2A) + 7Ah

1.2 Block diagram (Fig.1)

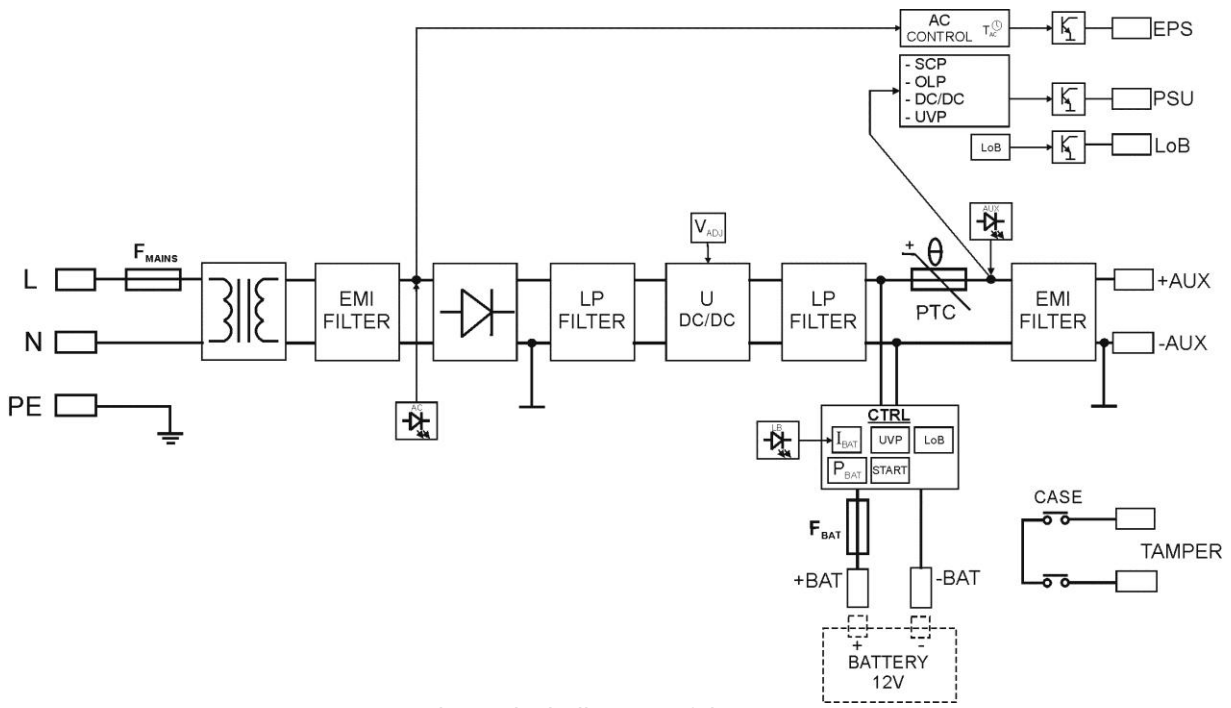

Fig.1. Block diagram of the PSU.

1.3 Description of PSU components and connectors (Table 1, Fig. 2).

Table 1. Elements of the PSU PCB (refer to chart 2).

Element no.	Description
[1]	**P_{BAT}; pins** - configuration of UVP battery protection function • **P_{BAT}** = ▬ protection (disconnection) of the battery off • **P_{BAT}** = ▪▪ protection (disconnection) of the battery on **T_{AC}; pins** - configuration of time lag of AC failure indication • **T_{AC}** = ▬ delay time T= 60s • **T_{AC}** = ▪▪ delay time T= 10s Legend: ▬ jumper installed ▪▪ jumper removed
[2]	**START** button (launching from battery)
[3]	**V_{ADJ}** potentiometer, voltage adjustment DC 12 ÷ 14,5V
[4]	**F_{BAT}** fuse in the battery circuit, F3,15A / 250V
[5]	**Terminals:** **~AC~** – AC power input **EPS** – technical output of AC power failure indication hi-Z state = AC power failure 0V state = AC power - O.K. **PSU** – technical output of PSU failure indication hi-Z state = failure 0V state = PSU status O.K. **LoB** – technical output of low battery voltage indication hi-Z state = battery voltage U_{BAT} <11,5V 0V state = battery O.K. **+BAT-** – terminals for battery connection **+AUX-** –DC power output, (+AUX= +U, -AUX=GND) Description: hi-Z – high impedance, 0V – connection to the ground GND
[6]	**LEDs** – optical indication: **AC** – AC power **LB** – battery charging **AUX** – output voltage DC
[7]	Connector to the external LED indicators.
[8]	**I_{BAT} Jumper;** - battery charging current configuration • **I_{BAT}** = ▬, Ibat =0,2 A • **I_{BAT}** = ▪▪, Ibat =0,5 A Description: ▬ jumper on, ▪▪ jumper off

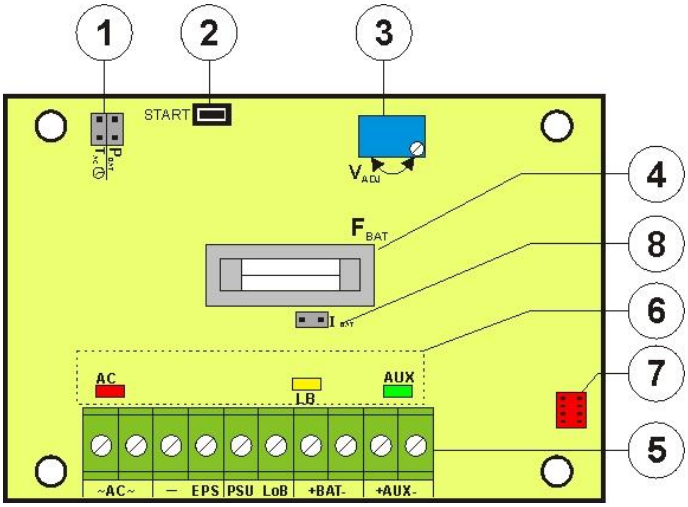

Fig.2. View of the PCB.

Table 2. Elements of the PSU (See fig. 3).

Element no.	Description
[1]	Isolation transformer
[2]	Power-supply unit board (See tab. 1, fig. 2)
[3]	**TAMPER;** microswitches (contacts) for sabotage protection **(NC)**
[4]	F_{MAIN} witch in the power supply circuit 230V, T500mA / 250V
[5]	**L-N** connector 230V AC, PE protection connector
[6]	Battery connectors: positive: +BAT = red, negative: - BAT = black

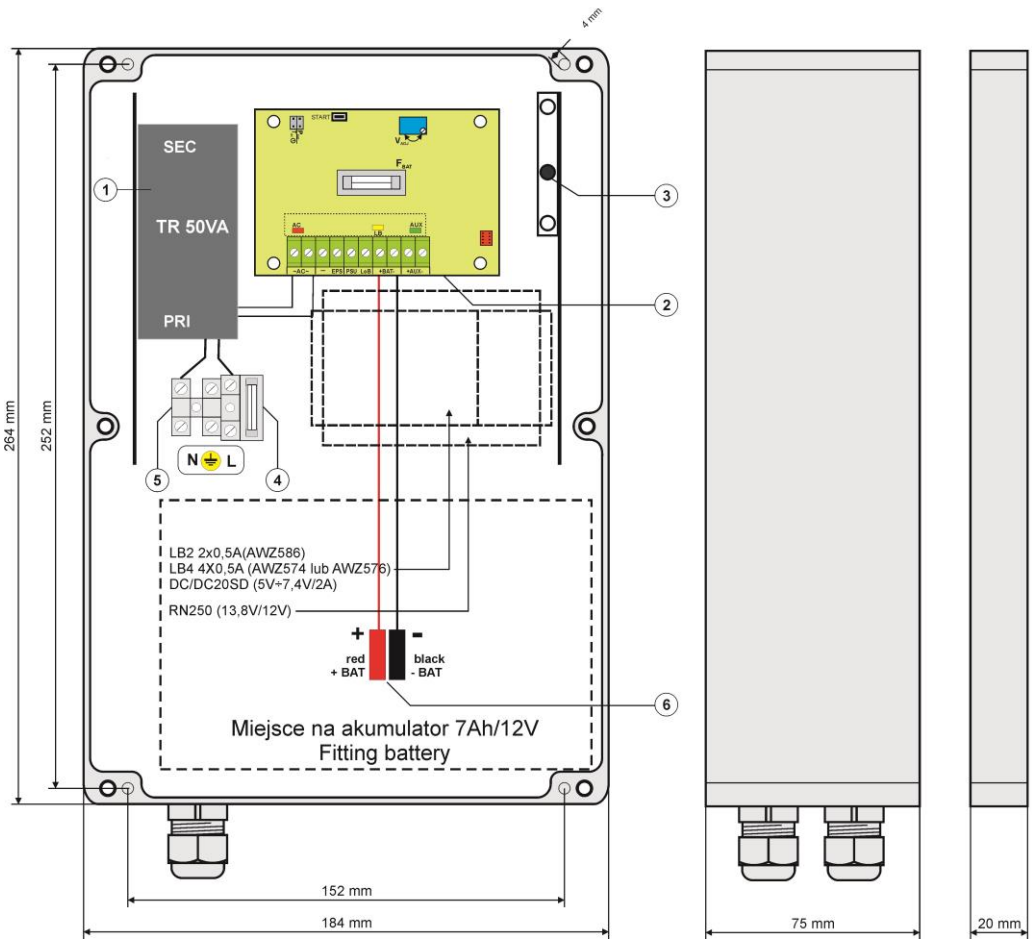

Fig.3. The view of the PSU.

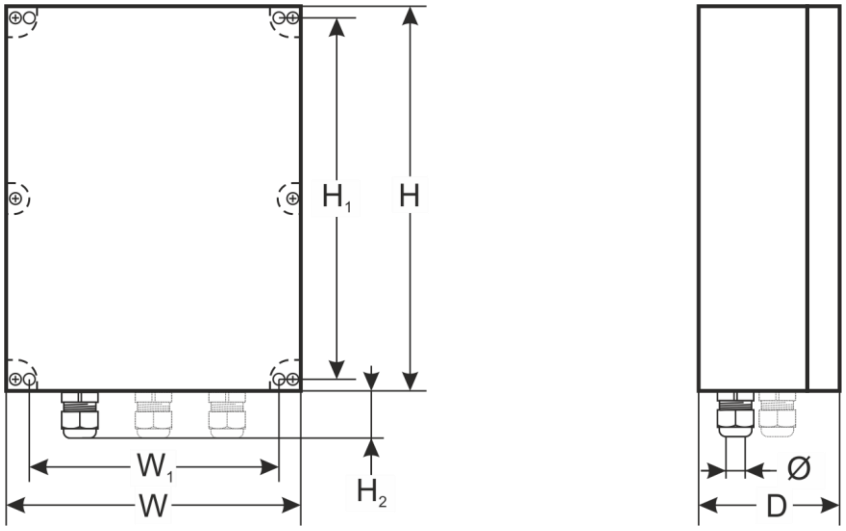

1.4 Specifications:

- electrical parameters (tab.3)
- mechanical parameters (tab.4)
- operation safety (tab.5)
- operating parameters (tab.6)

Electrical parameters (tab. 3)

PSU type:	A (EPS - External Power Source)
Mains supply	230V AC (-15%/+10%)
Current up to	0,23A @230V AC
Supply power	30W
Efficiency	71%
Output voltage	11V÷ 13,8V DC – buffer operation 10V÷ 13,8V DC – battery-assisted operation
Output current	**2A (without battery)** **1,8A + 0,2A battery charge** **1,5A + 0,5A battery charge**
Voltage adjustment range	12V÷14,5V
Ripple	40 mV p-p max.
Current consumption by PSU systems	16 mA
Battery charge current	0,2A/0,5A– jumper selectable I_{BAT}
Short-circuit protection SCP	Electronic - current limitation and/or activation of the F_{BAT} melting fuse in the battery circuit (failure requires fuse replacement). Automatic return.
Overload protection OLP	110-150% of the PSU power, manual restart (failure requires the disconnection of the DC output)
Battery circuit SCP and reverse polarity protections	F3,15A - current limitation, F_{BAT} fuse (in case of a failure, fuse-element replacement required)
Surge protection	varistors
Excessive discharge protection UVP	U<10V (± 0,5V) - disconnection of battery terminal
Tamper protection: - TAMPER output indicating enclosure opening	- micro switch, NC contacts (enclosure closed), 0,5A@50V DC (max.)
Technical outputs: - EPS; output indicating AC power failure	- OC type: 50mA max. Normal operation: L state (0V), failure: hi-Z state, - delay time 10s/60s (+/-20%) – jumper selectable $\mathbf{T_{AC}}$
- PSU; output indicating no DC power/PSU failure	- OC type: 50mA max. Normal operation: L state (0V), failure: hi-Z state,
- LoB; output indicating low battery voltage	- OC type, 50mA max. Normal operation (U_{BAT} >11,5V): L state (0V), failure (U_{BAT} <11,5V): hi-Z state The power supply unit does not feature a battery detection function.

F_{MAIN} fuse F_{BAT} fuse	T500mA / 250V F3,15A / 250V

Mechanical parameters (tab. 4).

Dimensions	W=184, H=264, D=95 [+/- 2 mm] W_1=152, H_1=252 [+/- 2 mm]
Height glands	H_2=25 [mm]
The number of cable glands/ Ø cables	2 pcs. / 4÷8mm
The dimensions of the battery compartment	170 x 115 x 75mm (WxHxD) max
Net/gross weight	2,2/2,3 kg
Enclosure colour	ABS, IP65, light grey
Closing	6xCheese head screw (at the front)
Connectors	Power supply: Φ0,63÷2,50 (AWG 22-10) Outputs: Φ0,41÷1,63 (AWG 26-14), Battery output BAT: 6,3F-2,5, 30cm, TAMPER output: wires, 30cm
Notes	The enclosure has a removable mounting board with the PSU systems.

Operation safety (tab.5).

Protection class PN-EN 60950-1:2007	I (first)
Degree of Protection PN-EN 60529: 2002 (U)	IP65
Electrical strength of insulation: - between input and output circuits of the PSU (I/P-O/P) - between input circuit and PE protection circuit (I/P-FG) - between output circuit and PE protection circuit (O/P-FG)	 3000 V/AC min. 1500 V/AC min. 500 V/AC min.
Insulation resistance: - between input circuit and output or protection circuit	 100 MΩ, 500V/DC

Operating parameters (tab.6).

Environmental class	II
Operating temperature	-10ºC...+40ºC
Storage temperature	-20ºC...+60ºC
Relative humidity	20%...90%, without condensation
Vibrations during operation	unacceptable
Impulse waves during operation	unacceptable
Direct insulation	unacceptable
Vibrations and impulse waves during transport	According to PN-83/T-42106

2. Installation.

2.1 Requirements.

The buffer PSU shall be mounted by a qualified installer with appropriate permissions and qualifications for 230V/AC installations and low-voltage installations (required and necessary for a given country). The device shall be mounted in confined spaces, according to the environment class II, with normal air humidity (RH=90% max. without condensation) and the temperature from -10°C to +40°C. The PSU shall operate in a vertical or horizontal position.

The power supply load balance should be done before installation:

1. **Output current 2A (without battery)**
2. **Output current 1,8A + 0,2A battery charge**
3. **Output current 1,5A + 0,5A battery charge**

Total device current + battery: 2A max.

As the PSU is designed for a continuous operation and is not equipped with a power-switch, therefore an appropriate overload protection shall be guaranteed in the power supply circuit. Moreover, the user shall be informed about the method of unplugging (usually through assigning an appropriate fuse in the fuse-box). The electrical system shall follow valid standards and regulations.

2.2 Installation procedure

1. Before installation, cut off the voltage in the 230V power-supply circuit.
2. Mount the PSU in a selected location and connect the wires. (with the gland).
3. Connect the power cables (~230Vac) to L-N clips of the PSU. Connect the ground wire to the clip marked by the earth symbol PE (PSU module connector). Use a three-core cable (with a yellow and green PE protection wire) to

make the connection. Lead the cables to the appropriate clips through the insulating bushing of the connection board.

The shock protection circuit shall be performed with a particular care, i.e. the yellow and green wire coat of the power cable shall stick to one side of the terminal - marked with '⏚' symbol on the PSU enclosure. Operation of the PSU without the properly made and fully operational shock protection circuit is UNACCEPTABLE! It can cause a device failure or an electric shock.

4. Connect the receiver cables to the AUX terminals at the power supply board.
5. If needed, connect the device cables to the technical outputs:
- EPS; technical output indicating AC power failure
- PSU; technical output indicating PSU failure.
- LoB; technical output indicating low battery voltage
6. Use the I_{BAT} jumper to set the maximum battery charging current, taking into account the battery parameters.
7. Using the P_{BAT} pins, determine whether the function of disconnecting the discharged battery U<10V (+/-5%) is to be on or off. **The battery protection is on if the P_{BAT} jumper is removed.**
8. Mount the battery in the battery compartment of the enclosure (Fig. 3). Connect the batteries with the PSU paying special attention to the correct polarity.
9.Switch on the 230V AC supply. The corresponding LEDs on the power supply PCB should be ON: red AC and green AUX. The yellow LB LED should light up while charging.
10.Check the output voltage (the power supply voltage without load should be 13,6V ÷ 13,9V, 11V ÷ 13,8V while battery charging). If the voltage requires adjustment, use the V_{ADJ}, potentiometer while monitoring the voltage at the AUX output of the power supply.
11.Check the current consumption of the receivers, taking into account the battery charging current, so as not to exceed the total current efficiency of the PSU (section 1.1).
12. Once the tests and control operation have been completed, close the PSU.

3. Operating status indication.

3.1 LED indication of operating status

The PSU is equipped with three diodes: AC, LB, AUX. They are placed on the PCB of the PSU and indicate its operation status.

- **AC - red diode**: under normal status (AC supply) the diode is permanently illuminated. The absence of AC supply is indicated by the AC diode going off.
- **LB - red diode**: indicates the battery charging process; the intensity of illumination is dependent on the charging current.
- **AUX** - **green diode**: indicates the DC supply status in the output of the PSU. Under normal status, the diode is permanently illuminated. In case of short-circuit or overload, the diode goes off.

3.2 Technical outputs:

The PSU is equipped with indication outputs.

- **EPS - technical output indicating 230V AC power failure**.
  The output indicates 230V AC power failure. Under normal status – with the 230V AC supply on, the output is shorted to ground GND. In case of power failure, the PSU will switch the output into hi-Z high impedance state after a time set by the T_{AC} jumper.

- **PSU – output indicating PSU failure**.
  The output indicates PSU failure. Under normal status (correct operation) the output is shorted to ground GND. If there is no DC voltage at the output (eg short circuit), the output is switched into hi-Z high impedance state.
  PSU failure can be caused by the following events:
  - Short circuit at the output
  - Output overload
  - DC/DC voltage converter failure
  - Under voltage protection activation

- **LoB – output indicating low battery voltage.**
  The output indicates low battery voltage. Under normal status (U_{BAT} > 11,5V) the output is shorted to ground GND, when the battery voltage drops too low (U_{BAT} < 11,5V) the output is switched into hi-Z high impedance state.

The power supply unit does not feature a battery detection function, in the case of no battery or non battery connected, the output is in the normal mode.

The power supply technical outputs are open collector (OC) type, as shown schematically below.

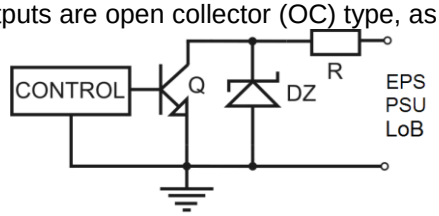

Fig. 4. Electrical diagram of the OC technical outputs.

4. Operation and use.

4.1 Overload or short circuit of the PSU output (SCP activation).

The AUX output of the PSU is equipped with the PTC polymer fuse protection. If the load of the PSU exceeds I_{max} (load 110% ÷ 150% @25ºC of the PSU power), the output voltage is automatically cut off and indicated by the green diode going off. Cut off the output load for approximately 1 minute to restore the output power.

In case of the short-circuit to the AUX, BAT output, or incorrect connection of the battery, the fuse F_{BAT} in the battery circuit becomes permanently damaged and the restoration of the voltage at the BAT output requires the replacement of the fuse.

4.2 Running the PSU from the battery.

The power supply is equipped with the button on the PCB allowing to run the PSU from the battery, when needed. To do that, press and hold the **START** button on the unit board for 1 second.

4.3 Deep discharge battery protection UVP.

The power supply is equipped with deep discharge battery protection (UVP). If the voltage at the battery terminals drops below 10V±0.5V during battery-assisted operation, the batteries will be disconnected. **The battery protection is on when the P_{BAT} jumper is off.**

Caution.
It is not recommended to disable UVP since deep discharge of the batteries reduces their ability to store energy, their capacity and lifetime.

4.4 Maintenance

Any and all maintenance operations may be performed following the disconnection of the PSU from the power supply network. The PSU does not require performing any specific maintenance measures, however, in the case of significant dust rate, its interior is recommended to be cleaned with compressed air. In case of fuse replacement, use a replacement of the same parameters.

WEEE MARK

According to the EU WEE Directive – It is required not to dispose of electric or electronic waste as unsorted municipal waste and to collect such WEEE separately.

The power supply unit is adapted for a sealed lead-acid battery (SLA). After the operation period it must not be disposed of but recycled according to the applicable law.

Pulsar
Siedlec 150, 32-744 Łapczyca, Poland
Tel. (+48) 14-610-19-40, Fax. (+48) 14-610-19-50
e-mail: biuro@pulsar.pl, sales@pulsar.pl
http:// www.pulsar.pl, www.zasilacze.pl