# AWZ585
v1.1
# LB2/1A/PTC
# Fuse module

EN*

Edition: 5 from 10.04.2018
Supersedes the edition: 4 from 06.09.2016

## 1. Technical description.

The fuse module is intended for dividing power in low-voltage alarm systems (power distribution) that require voltage within the range of: **10V ÷ 30V DC**. It contains two power inputs: a screw connector and a DC 5,5/2,1 outlet and two power outputs AUX1÷AUX2 which are independently secured with PTC 1A polymer fuses. An activation of the PTC fuse is indicated by an appropriate LED going out: L1 for AUX1, L2 for AUX2. Additionally, each output is secured by a varistor which protects the PSU and the receivers against surges in the power circuit.

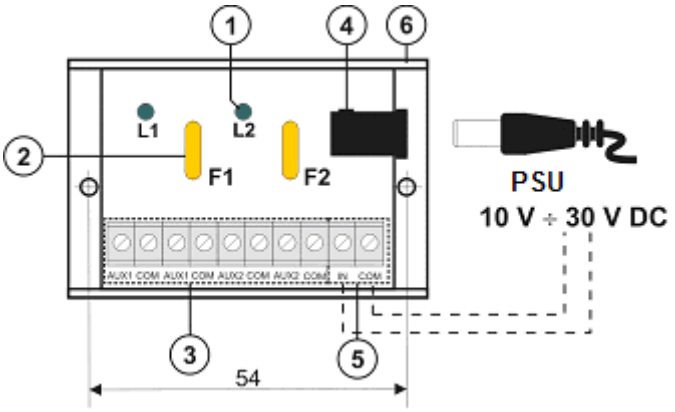


Fig.1. Drawing of the module.

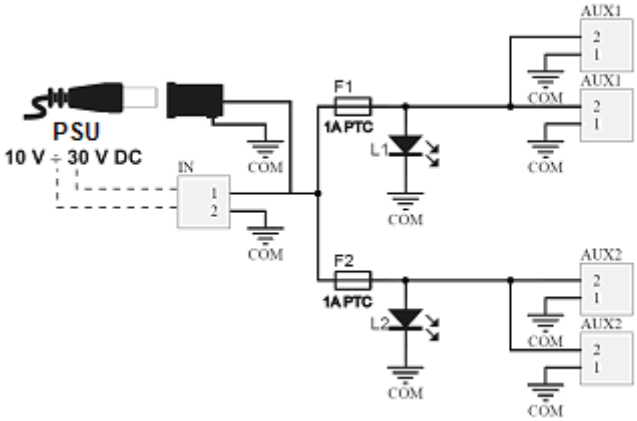


Fig.2. Electrical diagram.

**Table 1. Description of components and connectors of the PSU.**

| Element no. [fig. 1] | Description |
|---|---|
| [1] | **L1, L2** green LEDs |
| [2] | **F1, F2** fuses in the AUX (+) circuits |
| [3] | **AUX1, AUX2** independently secured outputs, common terminal COM (-) |
| [4] | **DC 5,5/2,1** outlet – module's power input |
| [5] | Screw connector – module's power input |
| [6] | Mounting strip |

* Using power supply unit with too low current efficiency may cause (in the case of a short-circuit at one of the outputs of the module) temporary power loss at other outputs.

**Table 2. Specifications.**

| | |
|---|---|
| **Supply voltage** | 10V ÷ 30V DC |
| **Output voltage** | $U_{AUX} = U_{IN}$ (equal to supply voltage) |
| **Current consumption** | 5 mA÷30 mA @ $U_{IN}$ = 10V ÷ 30V DC |
| **Number of power inputs** | 2: a **DC 5,5/2,1** outlet or a screw connector |
| **Number of power outputs** | 2x 2 (AUX terminals) |
| **Protections against:**<br>**- a short circuit SCP ***<br>**- an overload OLP**<br>**- a surge** | <br>- 2 x 1A<br>- 2 x 1A<br>- varistors |
| **LED indication** | Green LEDs **L1, L2** – AUX1÷AUX2 outputs status |
| **F1, F2 fuses** | 2 x 1A PTC |
| **Operating conditions** | II environmental class, -10°C ÷50°C |
| **Dimensions** | L=60, W=43, H=23 (+/-2mm) |
| **Fixing** | a mounting tape with an adhesive tape or dowel pins x2 (holes∅3mm) |
| **Connectors:**<br>**- of power output**<br>**- of power input** | <br>- screw connectors Φ0,41÷1,63 (AWG 26-14)<br>- a DC 5,5/2,1 outlet or a screw connector Φ0,41÷1,63 (AWG 26-14) |
| **Net/gross weight** | 0,03kg / 0,05kg |
| **Declarations, warranty** | CE, 2 year from the production date |

**WEEE MARKING**
According to the EU WEE Directive – It is required not to dispose of electric or electronic waste as unsorted municipal waste and to collect such WEEE separately.


**Pulsar**
Siedlec 150, 32-744 Łapczyca, Polska
Tel. (+48) 14-610-19-40, Fax. (+48) 14-610-19-50
e-mail: biuro@pulsar.pl, sales@pulsar.pl
http:// www.pulsar.pl, www.zasilacze.pl